523330
广东省东莞市黄江镇龙见田村青龙路2号
东莞市乔光电子有限公司
Zejun Zha

Zejun Zha
DONGGUAN QIAOGUANG ELECTRONIC CO LTD
NO.2 QINGLONG ROAD LONGJIANTIAN VILLAG
DONGGUAN
GUANGDONG 523330 CHINA

Date:	2019/07/10
Subscriber:	None
PartySite:	2288907
File No:	E507891
Project No:	4788976000
PD No:	19Q04582
Type:	R
PO Number:	

Subject: **Initial Production Inspection**

PLEASE NOTE: YOU ARE NOT AUTHORIZED TO SHIP ANY PRODUCTS BEARING ANY UL MARKS UNTIL THE INITIAL PRODUCTION INSPECTION HAS BEEN SUCCESSFULLY CONDUCTED BY THE UL FIELD REPRESENTATIVE.

An Initial Production Inspection (IPI) is an inspection that must be conducted prior to the first shipment of products bearing the UL Mark. This is to ensure that products being manufactured are in accordance with UL's requirements including the Follow-Up Service Procedure. After the UL Representative has verified compliance of your product(s), authorization will be granted for shipment of product(s) bearing the appropriate UL Marks as denoted in the Procedure.

Inspections at your plant will be conducted under the supervision of Mike Zhu, UL INSPECTION CENTER DONGGUAN, CHINA NAT'

IMPORT & EXP COM INSP CORP, 6 LI CHENG RD, ZHONGCHANG BLDG, 5TH FL, CHANG PING TOWN, DONGGUAN, GUANDDONG, China, 523565.,

PHONE:769-8381-7010, FAX: 769-8381-7017, EMAIL: UL.InspectionCenter213@ul.com

Marks as needed may be obtained from UL LABEL CENTER GUANGZHOU, ROOM 3006-3007, TIMES PROPERTY CENTER, NO 410 DONGFENG RD MIDDLE, GUANGZHOU, GUANGDONG, China, 510030. PHONE: 208-348-7088, FAX: 208-348-7088, EMAIL: LABELCENTER.GUZ@UL.COM, ATTN: T WEN

Please file revised pages and illustrations in place of material of like identity. New material should be filed in its proper numerical order.

NOTE: Follow-Up Service Procedure revisions DO NOT include Cover Pages, Test Records and Conclusion Pages. Report revisions DO NOT include Authorization Pages, Indices, Section General Pages and Appendixes.

Please review this material and report any inaccuracies to UL's Customer Service Professionals. Contact information for all of UL's global offices can be found at http://ul.com/aboutul/locations.

If you'd like to receive updated materials FASTER, UL offers electronic access and/or delivery of this material. For more details, contact UL's Customer Service Professionals as shown above., referring to the above Project and/or PD Numbers.

This material is provided on behalf of UL LLC(UL) or any authorized licensee of UL.

SUZ File

UL INSPECTION CENTER 213

Production Date:	UNKNOWN
Contact:	MR. Zejun Zha
Phone:	86 13771673271
EMail:	282758205@qq.com

ADDENDUM TO TRANSMITTAL LETTER

Zejun Zha
DONGGUAN QIAOGUANG ELECTRONIC CO LTD
NO.2 QINGLONG ROAD LONGJIANTIAN VILLAG
DONGGUAN
GUANGDONG 523330 CHINA

Date:	2019/07/10
Subscriber:	None
PartySite:	2288907
File No:	E507891
Project No:	4788976000
PD No:	19Q04582
Type:	R
PO Number:	

Subject: **Initial Production Inspection**

The following material resulting from the investigation under the above numbers is enclosed.

Issue Date	Vol	Sec	Pages	Revised Date
2019/06/27	1	1	Add New Volume	

***

PO: Zha, Zejun, April 19, 2019

Follow-Up Service Procedure

DO NOT DISCARD THIS PAGE

It is important to keep UL Procedures and Test Reports up-to-date as new or revised pages are received.
Correct maintenance will decrease the amount of time the UL Representative spends when visiting your facility.

UL LLC offers MyHome @UL, a dedicated website providing secure access to online tools and databases that can help simplify your compliance activities. You can customize your personal MyHome @UL page to include the content needed most, including timely information about certification updates and links to other Web sites you visit regularly. Visit http://my.home.ul.com/ to sign up today!

PAGES (in content order)	FUNCTION	HOW TO UPDATE
Authorization Page	Displays the Product Category, the type of Follow-Up Service (Type R=Reexamination / Type L=Label), the File Number and the Volume Number associated with each Applicant's, Manufacturer's and Listee's company name and address.	Replace existing page by matching the UL File Number and Volume Number. Discard the older page (refer to "Issued" or "Revised" date).
Addendum to Authorization Page*	Lists the additional names and addresses of manufacturing locations, when multiple locations exist	Replace existing page by matching the UL File Number and Volume Number. Discard the older page (refer to "Issued" or "Revised" date).
Listing Mark Data (LMD), Classification Mark Data (CMD) or Recognized Component Mark Data (RCMD) Pages*#	Used only for products covered under Type R Service. Displays the correct LMD, CMD, or RCMD Mark, the Control Number for Listed and Classified categories and additional information regarding minimum size, application, procurement, and any other optional markings, in addition to the UL Mark.	Replace existing page by matching the UL File Number and Volume Number. Discard the older page (refer to "Issued" or "Revised" date).
Multiple Listing (ML) Correlation Sheet*	Correlates product model numbers between those products made by a Manufacturer for the Basic Applicant and those supplied to another company, the Multiple Listee.	Replace, add or delete page(s) with most current "Issued" or "Revised" date.
Index*	Catalogs the contents of the Procedure by some logical means, i.e. Section Number, Report Reference Number, or Issue Date.	Replace present page by matching the UL File Number, Volume Number, Page Number and most current "Revised" date.
Appendices*# (App.)	Contains instructions for the Manufacturer and UL Representative concerning specific responsibilities and required periodic tests. May also outline tests to be conducted on samples to be forwarded to UL's facilities.	Replace present page by matching the UL File Number, Volume Number, Appendix letter (eg. App. A), Page Number and most current "Revised" date.
	Standardized Appendix Pages are the same for all manufacturers within a particular product category.	Replace present page by matching the Appendix letter (eg. App. A), Page Number and most current "Revised" date.
Follow-Up Inspection Instructions (FUII) Pages*	Contains information similar to that in the Appendices. FUII Pages are issued as part of the Procedure when a UL Standard is used in conjunction with the Procedure, and are the same for all manufacturers within a particular category.	Replace present pages by matching the Page Number and most current "Issued" or "Revised" date.
Section General*# (Sec. Gen.)	Contains description, requirements, identifications and/or specifications that are common to all products covered by the entire volume and supplements the information provided in the Description Section.	Replace present page by matching the UL File Number, Volume Number, Page Number and most current "Revised" date.
Description, or Section (Sec.)*	Contains the specific description of one or more products or systems. This includes written text supplemented by photographs, drawings, etc., as necessary, to define features that affect compliance with the applicable requirements.	Replace present page by matching the UL File Number, Volume Number, Section Number, Page Number and most current "Issued" date.

***** The above page(s) may not appear in all UL Follow-Up Service Procedures; UL's Conformity Assessment Services staff determines their inclusion.
# These pages are combined in the **Generic Inspection Instructions** for International Style Reports, identified, as example by Vol. X1, X2, etc.

PLEASE NOTIFY YOUR LOCAL UL OFFICE OF ANY CHANGES IN CONTACT NAME, COMPANY NAME OR ADDRESS, SO THIS MATERIAL AND IMPORTANT INFORMATION CONTINUES TO BE DELIVERED TO YOUR FACILITY WITHOUT INTERRUPTION.

FOLLOW-UP SERVICE PROCEDURE
(TYPE R)

COMPONENT - SURGE-PROTECTIVE DEVICES
(VZCA2,VZCA8)

Manufacturer: SEE ADDENDUM FOR MANUFACTURER LOCATIONS

Applicant: 2286375 (Party Site)
Fujian Qiaoguang Electronic Technology Co Ltd
Dengbang Industrial and Trade New Area Dayang Road Xiyuan Town
Zhangping
Fujian 361000 CHINA

Recognized Co.: 2286375 (Party Site)
SAME AS APPLICANT

Use of the Mark

This Follow-Up Service Procedure authorizes the above Manufacturer(s) to use the marking specified by UL LLC, or any authorized licensee of UL LLC, including the UL Contracting Party, only on products when constructed, tested and found to be in compliance with the requirements of this Follow-Up Service Procedure and in accordance with the terms of the applicable service agreement with UL Contracting Party. The UL Contracting Party for Follow-Up Services is listed in the addendum to this Follow-Up Service Procedure ("UL Contracting Party"). UL Contracting Party and UL LLC are referred to jointly herein as "UL."

It is the responsibility of the Applicant, Manufacturer(s), and Recognized Company to make sure that only the products meeting the aforementioned requirements bear the authorized Marks of UL LLC, or any authorized licensee of UL LLC.

Additional Responsibilities

Additional responsibilities, duties and requirements for the Applicant and Manufacturers are defined under Additional Resources at the following web-site: http://www.ul.com/fus. Manufacturers without Internet access may obtain the current version of these documents from their local UL customer service representative or UL field representative. For assistance, or to obtain a paper copy of these documents or the Follow-Up Service Terms referenced below, please contact UL's Customer Service at http://www.ul.com/aboutul/locations/, select a location and enter your request, or call the number listed for that location.

Acceptance of Follow-Up Services

The Applicant and the specified Manufacturer(s) and any Recognized Company in this Follow-Up Service Procedure must agree to receive Follow-Up Services from UL Contracting Party. If your applicable service agreement is a Global Services Agreement ("GSA"), the Applicant, the specified Manufacturer(s) and any Recognized Company will be bound to a Service Agreement for Follow-Up Services upon the earliest by any Subscriber of a) use of the prescribed UL Mark, b) acceptance of the factory inspection, or c) payment of the Follow-Up Service fees. The Service Agreement incorporates such GSA, this Follow-Up Service Procedure and the Follow-Up Service Terms which can be accessed by clicking the following link: http://services.ul.com/fus-service-terms. In all other events, Follow-Up Services will be governed by and incorporate the terms of your applicable service agreement and this Follow-Up Service Procedure.

Use and Ownership of the Follow-Up Service Procedure

This Follow-Up Service Procedure, and any subsequent revisions, is the property of UL and is not transferable. This Follow-Up Service Procedure contains confidential information for use only by the Applicant, the specified Manufacturer(s), and representatives of UL and is not to be used for any other purpose. It is provided to the Subscribers with the understanding that it is not to be copied, either wholly or in part unless specifically allowed, and that it will be returned to UL, upon request.

Definition of Terms

Capitalized terms used but not defined herein have the meanings set forth in the GSA and the applicable Service Terms or any other applicable UL service agreement.

No Third Party Liability

UL shall not incur any obligation or liability for any loss, expense or damages, including incidental, consequential or punitive damages arising out of or in connection with the use or reliance upon this Follow-Up Service Procedure to anyone other than the above Manufacturer(s) as provided in the agreement between UL LLC or an authorized licensee of UL LLC, including UL Contracting Party, and the Manufacturer(s).

Certification Body

UL LLC has signed below solely in its capacity as the certification body to indicate that this Follow-Up Service Procedure fulfills the requirements for certification documentation issued by the certification body.

Bruce A. Mahrenholz
Director
Conformity Assessment Programs (CPO)
UL LLC

LOCATION

2288907 (Party Site)
Dongguan Qiaoguang Electronic Co Ltd
No.2 Qinglong road Longjiantian Village Huangjiang Town
Dongguan
Guangdong 523330 CHINA
Factory ID: None
UL Contracting Party for above site is: UL GmbH

Recognized Component Marking Data Page (RCMDP)

(FILE IMMEDIATELY AFTER AUTHORIZATION PAGE)

RECOGNIZED COMPONENT MARKING

Products Recognized under UL's Component Recognition Service are identified by marking elements consisting of:

1. The Recognized Company's identification specified in this document.

2. A catalog, model or other applicable product designation specified in the descriptive sections of this document.

3. The UL Recognized Component Mark shown below.

Only those components, which actually bear the Marking, should be considered as being covered under the Recognition Program. The UL Listing or Classification Mark is not authorized for use on or in connection with Recognized Components.

RECOGNIZED COMPONENT MARK

Minimum size of the Recognized Component Mark is not specified as long as it is legible. Minimum height of the registered symbol ® shall be 3/64 inch but may be omitted if it is out of proportion to the Recognized Component Mark or not legible to the naked eye.

The manufacturer may reproduce the Mark electronically. Any decision regarding the acceptability of the manufacturer's Mark reproduction will be made at the Reviewing Office.

THIS FORM PAGE IS TO BE REVISED BY THE NORTHBROOK LABEL DEPARTMENT ONLY

Recognized Component Marking Data Page (RCMDP)

(File Immediately After Authorization Page)

RECOGNIZED COMPONENT MARKING

Products Recognized under UL's Component Recognition Service are identified by marking elements consisting of:

1. The Recognized Company's identification specified in this document.

2. A catalog, model or other applicable product designation specified in the descriptive sections of this document.

3. The UL Recognized Component Mark shown below:
   (A) Recognized only to Canadian safety requirements, or;
   (B) Recognized to both U.S. and Canadian safety requirements.

Only those components, which actually bear the Marking, should be considered as being covered under the Recognition Program. The UL Listing or Classification Mark is not authorized for use on or in connection with Recognized Components.

Recognized Component Mark

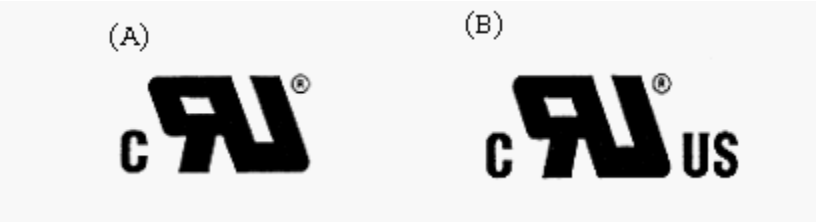

Minimum size of the Recognized Component Mark is not specified as long as it is legible. Minimum height of the registered symbol ® shall be 3/64 inch but may be omitted if it is out of proportion to the Recognized Component Mark or not legible to the naked eye.

The manufacturer may reproduce the Mark electronically. Any decision regarding the acceptability of the manufacturer's Mark reproduction will be made at the Reviewing Office.

THIS FORM PAGE IS TO BE REVISED BY THE NORTHBROOK LABEL DEPARTMENT ONLY

Model	Sec.	USR	CNR
Model Component - Surge Protective Devices, Type 5, Varistors, Cat No. FTR07D, followed by 151, 181, 201, 221, 241, 271, 301, 331, 361, 391, 431, 471, 511, 561, 621, 681, 751, 781, 821 followed by K. FTR10D, followed by 151, 181, 201, 221, 241, 271, 301, 331, 361, 391, 431, 471, 511, 561, 621, 681, 751, 781, 821, 911, 102, 112 followed by K. FTR14D, followed by 151, 181, 201, 221, 241, 271, 301, 331, 361, 391, 431, 471, 511, 561, 621, 681, 751, 781, 821, 911, 102, 112, 122 followed by K. FTR20D, followed by 181, 201, 221, 241, 271, 301, 331, 361, 391, 431, 471, 511, 561, 621, 681, 751, 781, 821, 911, 102, 112, 122 followed by K.	1	X	X

USR - United States Standard, Recognized
CNR - Canadian National Standard, Recognized

APPENDIX A

UL REPRESENTATIVE'S DUTIES AND INSTRUCTIONS FOR EXAMINATION OF THE PRODUCT

UL REPRESENTATIVE'S DUTIES:

The UL Representative's duties include, but are not limited to:

Examine the construction of production bearing, or intended to bear, the UL Mark or Markings to determine compliance with the description of the product and any other requirements expressed in this Procedure.

Where so specified by Special Appendix B, forward samples to UL for Follow-Up Tests. The packaging and shipment of samples are the responsibility of the manufacturer.

Report to the manufacturer and Follow-Up Services Department by means of a Variation Notice (VN) if:

a. Variations in construction are found.

Explain to the manufacturer that a Variation Notice is a means of communication with the manufacturer and forms a record of those items where nonconformance to the Procedure has been encountered.

Factory Tests – Verify that the manufacturing tests described in Appendix D are conducted regularly as specified, by reviewing the manufacturer’s records if necessary; and witness representative tests.

PROCEDURE IN THE EVENT OF NONCONFORMANCE:

When a product does not comply with the Follow-Up Service Procedure require that the manufacturer shall either

a) Remove any markings referencing UL from the product, or

b) Suitably modify all products that do not comply with the Follow-Up Service Procedure, or

c) Hold shipment pending further instructions from CAS, or

In the event of a disagreement between the manufacturer and the UL Representative as to whether a product is acceptable, the manufacturer shall hold production at the factory pending resolution of the variations. The manufacturer has the right to appeal a decision with which he disagrees and the UL Representative shall provide the name of the CAS Engineer to whom the appeal is to be made. Should CAS grant temporary authorization for the continued use of the UL Mark, such temporary authorization shall only be for the time needed to review and/or process the Procedure revisions, or as otherwise specified to cover a particular lot or production run.

INSTRUCTIONS FOR INSPECTION OF THE PRODUCT:

At each inspection, samples of current production and/or stock shall be examined for compliance with the applicable descriptions and requirements contained in this Procedure. In making this determination, consideration shall also be given to the following general requirements applying to the product covered by this Procedure.

Electrical Spacings - Measure minimum through air and over surface spacings when specified.

Internal Wiring - Conductors shall be routed away or protected from sharp edges and moving parts.

Markings - Information required shall be legibly marked on the product, in the manner and minimum height specified.

Security of Parts - Parts shall be secured to prevent any rotation or shifting that could result in a reduction of electrical spacings.

Special requirements that may also apply to some or all of the products covered by this Procedure include the following:

Accessories, Parts and Accessories - Such items packaged with the product shall be specifically described in the Procedure.

Connectors - Connectors shall be applied so as to ensure the insulation and containment of all bare wiring strands.

Packaging - There shall be no marking in the instruction manual or on the carton or package that is, or could be construed to be, in conflict with or an extension of the use covered in the instruction manual or Procedure.

Printed Wiring Boards - Printed wiring boards that are described in detail shall show no burning, bubbling or other visible evidence of damage to their conductors or substrate material as a result of the fabrication process. With respect to printed wiring boards using Surface Mounted Technology (SMT), if the SMT assembly process is done at temperatures and times below the soldering limits, the boards may be accepted. If the SMT assembly process is conducted on-site with temperature/times in excess of soldering limits or if the process is conducted off-site and the temperature/times cannot be verified, a visual inspection is to be conducted as described in the Follow-Up Services Manual. The printed wiring boards should be inspected for mechanical damage or evidence of exposure to excessive temperatures that may have occurred during the soldering operation. If nonconforming features are found after visual inspection, the lot is to be rejected, otherwise, the use of printed wiring boards may continue without any interruption. If any instructions for SMT components are specified in the Follow-Up Service Procedure, then the above instructions are superseded.

Internal Plastic Parts - For each type of plastic material, review the Recognized Component Directory and Supplement in order to insure that the plastic material in question has the specified flammability rating (or better) at the thickness specified. Alternatively, if provided by the manufacturer, the Component Recognition Report or Recognition Card may be used only if it is issued after the latest publication of the Recognized Component Directory.

APPENDIX B

INSTRUCTIONS FOR UL REPRESENTATIVE'S SAMPLE SELECTION

UL REPRESENTATIVE:

Products covered by this Procedure are required to undergo Follow-Up Tests at UL. Annually, the UL Representative shall select samples of one catalog number from each group, according to Table 1 - Sample Selection Guide. If more than one catalog number is included within a group, a different catalog number shall be selected, if possible, each time the annual sample selection is performed.

The samples shall be properly tagged and identified, and forwarded to the UL LLC Melville Office, Attention To: SPD Follow-Up Testing.

The tests to be conducted are described in Appendix C.

TABLE 1 - SAMPLE SELECTION GUIDE

Group	Product Designation (Cat. No., Mod. No.)	Custom Construction Sample ID (see Table 3)	Procedure Section or Report Date	Number of Required Samples (See Note 2)	Number of External Circuit Breaker or Fuses Required (See Table 2 Below)

Note 1: If samples for Short Circuit Current and Intermediate Current Testing require a maximum test voltage and/or specific instructions to be used to force the device to turn-on at or above the test voltage specified in Appendix C, instructions are to be provided with the samples. If a maximum test voltage or specific instructions are not provided and the device does not turn-on at or above the Test Voltage specified in Appendix C, testing will need to be repeated at additional cost to the client.

Note 2: Manufacturer may provide additional samples for calibration/pretesting at the manufacturer’s discretion.

TABLE 2	External Circuit Breaker or Fuses Required						
Current Rating (A)	Circuit Breaker:		Fuse				AIC Rating (kA)
	Manufacturer	Type	Fuse Class	Manufacturer	Type or Cat. No.	UL File	

Note: If required external circuit breakers or fuses are not provided, a project will be opened to purchase the required external circuit breakers or fuses and bill the applicant accordingly.

Table 3 - Custom Construction Sample Information					
	Derated MOV (Varistor) Information				Gas Tube/Gap Shorted (Yes/No)
ID	Type	Manufacturer	UL File	Rated Voltage	

APPENDIX C

INSTRUCTIONS FOR FOLLOW-UP TESTS AT UL

GENERAL:

The samples forwarded by the UL Representative shall be subjected to the test described below.

Current Test - Short Circuit and Intermediate Current:

METHOD - In accordance with Clause 44.2, 44.3 of UL 1449 (4th edition).

Models From Group No.	Mode	Test Voltage (V ac) Note	Rated Voltage (V ac)	Short Circuit Current (A)	Power Factor	Circuit Breaker or Fuse Rating
		___(___)				
		___(___)				
		___(___)				
		___(___)				

Models from Group No.	Mode	Open Circuit Test Voltage (Vdc) Note	Rated Voltage (Vdc)	Short Circuit Current (A)	Time Constant (ms)	Circuit Breaker or Fuse Rating
		___(___)				
		___(___)				
		___(___)				
		___(___)				

Note: Test voltage must be minimum, and as close as possible to, the voltage specified. If the SPD does not conduct when initially subjected to the voltage specified, reenergize the sample a second time. If the SPD still does not conduct and a voltage is detailed in parenthesis (maximum test voltage), recalibrate the circuit using a test voltage up to but not exceeding the maximum test voltage (provided the lab has the capability to increase the voltage) and repeat the test.

BASIS FOR ACCEPTABILITY - In accordance with Clauses 44.1.11 and 44.1.12 of UL 1449 (4th edition).

Withstand Test (For SPDs employing thermal-links in series with the load in Cord-Connected and Direct Plug-In SPDs):

METHOD - In accordance with Section 51 of UL 1449 (4th edition) and modified for available fault current level and power factor per Tables 12.1 and 52.1, respectively. In lieu of using the 30 A fuse to ground, the SPD is to be grounded by means of a 3 A nonrenewable, non time-delay fuse, having a voltage rating not less than that of the SPD, connected between the SPD enclosure and the grounded conductor. In addition, following the Withstand Test, the SPD must comply with the Leakage Current and Grounding Continuity Tests in Section 37 and 48 of UL 1449, respectively.

Models From Group No.	Mode	Test Voltage (V ac)	Short Circuit Current (A)	Power Factor	Circuit Breaker or Fuse Rating

BASIS FOR ACCEPTABILITY - In accordance with Clause 51.1 of UL 1449 (4th edition).

DIFFERENTIAL SCANNING CALORIMETRY (DSC)

The spectrum should indicate that the resin of the sample tested is of the same basic composition as that recorded in this procedure.

METHOD – In accordance with Part 46 of UL 746A (5th edition). A thermogram of (each of) the thermal responsive element material(s) was obtained by means of a thermal analyzer with a DSC (Differential Scanning Calorimeter) module. Sampling methods and instrument settings used in obtaining the thermogram are recorded in the appropriate sections of the thermogram record.

Group	Model	Section	Dated	Reference Date	Illustration	Specified Temperature

BASIS FOR ACCEPTABILITY - Comparison of the thermogram obtained with the reference thermograms shall show the materials to have the same basic thermal properties. The inflection (melting) point (Temperature) of the eutectic material shall be within ± 5˚C (± 9˚F) of the originally specified.

APPENDIX D

MANUFACTURER'S RESPONSIBILITIES:

The manufacturer's responsibilities include, but are not limited to:

1. Control of UL Mark - Restrict the use of markings that reference UL (either directly by use of the name, an abbreviation of it, or the UL symbol, Classification Mark or Recognized Component Mark, or indirectly by means of agreed-upon markings that are understood to indicate acceptance by UL) to those products that are found by the manufacturer's own inspection to comply with the Follow-Up Service Procedure description. Use of such markings is further limited by the agreements that have been executed by the subscriber and UL.

2. Packaging - There shall be no marking on the carton or package that is, or could be construed to be, in conflict with or an extension of the use covered in the instruction manual or Procedure.

3. Production-Line Tests - Conduct the Tests detailed below under Requirements for Factory Tests.

4. Test Equipment Calibration - The manufacturer shall determine that the test equipment is functioning properly and have it calibrated annually, or whenever it has been subject to abuse (such as being dropped or struck with an object) or its accuracy is questionable. The test equipment and instruments shall be calibrated either by the manufacturer or by an outside laboratory. In either case, they shall be calibrated by comparison with a Standard that is traceable to a National Standard. For in-house calibrations, the Standard (weight and gauge blocks) used shall be calibrated every three years, or whenever the Standard has been subjected to some form of abuse that may affect the Standard's fitness for use. The Standard shall be stored to protect it from damage or deterioration per the standard manufacturer's recommendations. Records of calibration of the test equipment and Standard shall be maintained until the next required calibration is completed and recorded. The records shall be readily available for review by a UL Representative. A letter from the outside laboratory or from an off-site manufacturer's calibration lab stating that their lab standards are directly traceable to their country's National Standard and outlining their traceability pathway is considered adequate proof of traceability.

5. Required Records - Maintain records of test performance. The records shall include the model or catalog designation of the product, the date of production, the tests performed, the number of units tested, the test results, the disposition of rejected items, and the corrective action taken to ensure that similar rejections will not occur in the future. Records for test performance shall be retained for six (6) months and shall be readily available for review by the UL Representative.

Exception: Records of test results need not be maintained for 100% Production-Line Tests.

6. Packaging - There shall be no marking on the carton or packaging that is, or could be construed to be, in conflict with or an extension of the use covered in the instruction manual, Procedure or UL 1449. No references to UL Standards are permitted unless the product is also Complementary Listed under that category.

7. Requirements For Factory Tests - The following Production-Line Tests shall be conducted in the following order, on the products covered by this Procedure.

A. Production-Line Grounding Continuity Test

1. General: Each SPD that is provided with means for grounding shall be subjected to the Grounding Continuity Test on 100 percent of production.

   The purpose is to determine grounding continuity between the grounding contacts, terminals, or leads and the accessible dead metal parts of the SPD that are likely to become energized. The grounding contact of a receptacle, grounding pin of an attachment plug, and other means for grounding on the load side shall be included in this test.

2. Test Equipment: An appropriate device, such as an ohm-meter, a battery and buzzer combination, or the like.

   Method and Basis for Acceptability: Only a single test need be made if the accessible metal selected and the means for grounding on the load side are conductively connected to all other accessible metal. The check for continuity is to be applied between the point of connection of the SPD grounding means and the metal parts in question.

   Compliance is to be determined by indication of continuity.

B. Production-Line Dielectric Voltage-Withstand Test

1. General: The manufacturer shall subject 100 percent of production of all products to a Production-Line Dielectric Voltage-Withstand Test in accordance with the following.

   Exception: An SPD that employs a solid-state component that can be damaged by the dielectric potential may be tested before the component is electrically connected. However, a random sampling of each day's production is to be tested at the potential specified in items a-d above but the circuitry may be rearranged for the purpose of this test to minimize the likelihood of solid-state-component damage while retaining representative dielectric stress of the circuit.

   Exception: Discrete components, such as MOVs, Gas Tubes, SADs and the like are exempt from this test.

2. Test Equipment: Alternating-current test equipment shall include a transformer having an essentially sinusoidal output and a frequency within the range of 40 - 70 Hz. The test equipment shall include a transformer having an essentially sinusoidal output and a frequency within the range of 40 - 70 Hz. The test equipment shall include an audible or visual indication of breakdown. In the event of breakdown for automatic or station-type operations, either manual reset of an external switch is required or an automatic reject of the unit under test is to result.

   If the output of the test equipment is less than 500 VA, the equipment shall include a voltmeter in the output circuit to directly indicate the test potential.

   If the output of the test equipment is 500 VA or larger, the test potential may be indicated by a voltmeter in the primary circuit or in a tertiary winding circuit, by a selector switch marked to indicate the test potential of equipment having a single test potential output. When marking is used without an indicating voltmeter, the equipment shall include a positive means, such as a power-on lamp, to indicate that the manually reset switch has been following a tripout.

3. Test Method: Each SPD shall withstand without electrical breakdown the application of a potential between uninsulated live parts and accessible dead metal parts of grounding contacts or leads that are likely to become energized.

   The test potential shall be:

   a. 1000 V plus twice the rated voltage applied for 1 minute; or

   b. 1200 V ac plus 2.4 times the rated voltage applied for 1 second; or

   c. 1400 V dc plus 2.8 times the rated voltage applied for 1 minute; or

   d. 1700 V dc plus 3.4 times the rated voltage applied for 1 second.

   The SPD may be in a heated or unheated condition for this test.

   The test shall be conducted when the SPD is complete, that is, fully assembled. It is not intended that the SPD be unwired, modified, or disassembled for the test.

   Exception: The test may be performed before final assembly if the test represents that for the completed SPD.

4. Basis for Acceptability: Each SPD shall withstand the above test without electrical breakdown.

C. Production-Line Nominal Varistor Voltage Test – For Discrete Component Varistors (MOVs) when detailed in the Manufacturing Process Steps in the individual UL Report:

Each MOV is to be subjected to the following test.

Each MOV is connected to a variable DC voltage source that is adjusted to maintain a current of 1 mA DC, unless a different current value is specified in the report, applied between 10 ms and 10s, and the voltage across the MOV measured. A circuit functionally equivalent to the figure below may be employed.

These voltage values are recorded and compared to the nominal varistor voltage specified in each report.

Basis for Acceptability: The measured values shall be within the specified range.

P_1 = adjustable dc power supply

R1 = sufficient value to simulate current source (for example, 100 kΩ for $I_{N(dc)}$ = 1.0 mA)
R2 = sufficient value to simulate a voltage source (for example, 10 kΩ for I_D = 10 μA)
DVM = digital voltmeter
VUT = varistor under test

To Measure	Switch Position			
	S1		S2	
	V	I	V	I_D
I_D		X		X
$V_{N(dc)}$	X		X	

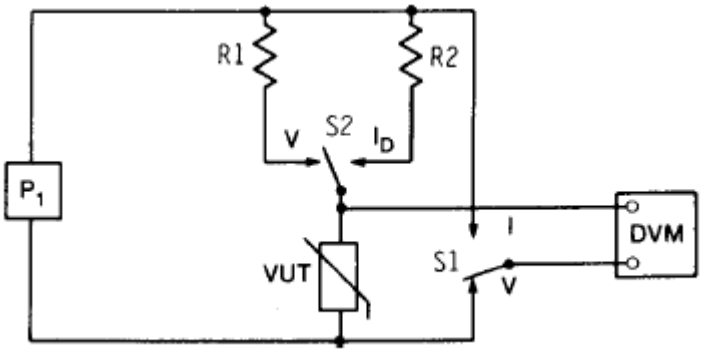

D. BREAKDOWN VOLTAGE MEASUREMENT TEST - FOR GAS Discharge TUBE DEVICES
For gas tube devices when the breakdown voltage is provided in the individual procedure (specified in the manufacturing process) shall be subjected to the following test:

Each gas tube shall be connected to a pulse generator that will produce a rate of voltage rise of 100 volts per second. The exponential voltage rise shall remain within ±10 percent of the 100 volts per second voltage rise-rate. The discharge current shall be sufficient to cause operation in the arc mode but not exceed 10 amperes.

These voltage values were recorded and compared to the breakdown voltage rating of the device as specified by the manufacturer in each report.

Basis for Acceptability: The measured values shall be within the specified range.

GENERAL

PRODUCT COVERED:

Component - Surge Protective Devices (SPD):

MULTIPLE MANUFACTURING LOCATIONS:

When more than one manufacturing location is indicated on the Authorization Page Addendum for the Procedure Volume, the factory identification code associated with each manufacturing location shall be marked on the product.

Please see the Addendum to the Authorization Page for Factory Locations and ID Marking

CONSTRUCTION DETAILS:

If provided, and unless otherwise described in individual report, the following paragraphs apply to all equipment included in this Procedure. Additional requirements for other components and material are as specified in individual Procedure Section.

Exception: Unless otherwise described in individual report, Discrete components, such as Metal Oxide Varistors (MOVs), Gas Discharge Tube (GDTs), Silicon Avalanche Diodes (SADs), and the like, need only comply with the Spacings requirements in this section.

BONDING – Accessible dead-metal parts likely to become energized by hazardous voltage circuits, including fan guards, screens and cover plates, shall be reliably connected by bolts, straps or wires to power supply circuit grounding means. Metal-to-metal contact provided by welding, machine bolts, nuts and lock washers and/or paint piercing washers.

CONFORMAL COATINGS – QMJU2 (Canadian Requirements satisfied by US Requirements) - When a conformal coating is specified in the individual report, the field representative shall determine, as detailed in the Recognized Component Directory, that the Conformal Coating is:

1) applied within its Min. and Max. thickness,
2) applied to the minimum specified thickness of the PWB,
3) suitable for use with the PWB ANSI Grade,
4) suitable for the minimum spacing’s as specified in the individual report,
5) equivalent or higher flame and temperature ratings as required below and in the individual report for the PWB used, and
6) applied and cured in accordance with conformal coating manufacturer's specifications/instructions.

Connectors – Primary circuit wire connectors are Listed, suitable for the wire used and, rated for the voltage of the SPD, minimum 250 V.

Corrosion Protection – All ferrous metal parts are protected against corrosion by painting, enameling, galvanizing, plating or other equivalent means.

Grounding – The earth ground wire is secured to the metal enclosure or frame of the appliance by a closed-loop connector with a dedicated screw or threaded stud and nut with lock type washer. For cord connected products, connections in the equipment-grounding conductor path from the receptacle grounding contact to the equipment-grounding conductor of the power-supply cord shall be welded, bolted, mechanically secured prior to soldering, or made by equivalent positive means. For permanently connected products a wire-binding screw intended for connection of a grounding conductor shall have a green colored head that is hexagonal, slotted, or both, and be suitable for the connection of a minimum No. 14 AWG grounding conductor. A push-in (screw less) connector, or a quick-connect, or similar friction-fit connector shall not be used for the grounding terminal.

Insulating Tubing – All tubing is UZFT2 Coated Electrical Sleeving, YDPU2 Electrical Extruded Tubing, YDTU2 Miscellaneous Tubing, rated for the voltage of the SPD, minimum 300 V, 105°C.

Internal Wiring – Listed or R/C AVLV2 (Canadian Requirements satisfied by US Requirements), rated, for the voltage of the SPD, minimum 300 V, 105°C. Wires are soldered or terminated with crimp-on, closed loop, or push-on connectors with matching detents. Wire connectors are Listed, pre-insulated, suitable for the number and sizes of wires involved and are applied using tools specified by the wire connector manufacturer. No uninsulated conductors should extend beyond wire connector body. All wires to ground are green or green with yellow marking or marked similar. All internal wiring is adequately routed away from sharp edges and moving parts. For permanently connected SPD, supply conductors shall not be smaller than No. 14 AWG copper or No. 12 AWG aluminum.

Mechanical Assembly – Enclosure parts and component mounting assemblies reliably secured by welding, thread forming screws, rivets or machine bolts with nuts and lock washers or star washers or any combination thereof.

Metallized Coatings – Not permitted on internal or external surfaces of thermoplastic enclosure unless specifically described in Report.

Printed Wiring Board – ZPMV2 (Canadian Requirements satisfied by US Requirements), rated minimum V-2, minimum 105°C. As part of the Follow-Up Service inspection, it should be determined that all those printed wiring boards specified in the Procedure as Recognized, are identifiable as Recognized with minimum flammability class and operating temperature limits as specified in applicable sections covered by this Procedure and suitable for direct support of live parts as indicated by the delta symbol "Δ" on the board or the word "ALL" in the Recognized Component Directory.

Spacings – Min. spacings as indicated below are maintained between uninsulated live metal parts of opposite polarity and between uninsulated live metal parts and any other uninsulated metal part, dead or live, not of the same polarity.

		Spacings, in mm (inches)		
		Between any uninsulated live part and an uninsulated live part of opposite polarity, and uninsulated grounded dead metal parts other than the enclosure, or exposed dead metal parts that are isolated (insulated)[e,f]		Between any uninsulated live part and the walls of a metal enclosure, including fitting for conduit or armored cable[b,c,e,f]
Product	Potential, volts-RMS	Through air or oil	Over surface	Shortest distance
Type 3CA SPDs	0 - 50	1.2 (3/64)	1.2 (3/64)	1.2 (3/64)
	51 - 125	1.6 (1/16)	1.6 (1/16)	6.4 (1/4)
	126 - 250	2.4 (3/32)	2.4 (3/32)	6.4 (1/4)
	251 - 600	9.5[d] (3/8)[d]	12.7[d] (1/2)[d]	12.7 (1/2)
Type 1CA or Type 2CA SPDs	0 - 150	3.2[a] (1/8)[a]	6.4 (1/4)	12.7 (1/2)
	151 - 300	6.4 (1/4)	9.5 (3/8)	12.7 (1/2)
	301 - 600	9.5 (3/8)	12.7 (1/2)	12.7 (1/2)
	601 - 1000	14 (0.55)	21.6 (0.85)	25.4 (1)
Product	Potential, volts-DC	Through air or oil	Over surface	Shortest distance
Type 3CA SPDs	0 - 70.7	1.2 (3/64)	1.2 (3/64)	1.2 (3/64)
	70.8 - 176.8	1.6 (1/16)	1.6 (1/16)	6.4 (1/4)
	176.9 - 353.5	2.4 (3/32)	2.4 (3/32)	6.4 (1/4)
	353.6 - 848.5	9.5[d] (3/8)[d]	12.7[d] (1/2)[d]	12.7 (1/2)
Type 1CA or Type 2CA SPDs	0 - 212.1	3.2[a] (1/8)[a]	6.4 (1/4)	12.7 (1/2)
	212.1 - 424.3	6.4 (1/4)	9.5 (3/8)	12.7 (1/2)
	424.4 - 848.5	9.5 (3/8)	12.7 (1/2)	12.7 (1/2)
	848.6 - 1414.2	14 (0.55)	21.6 (0.85)	25.4 (1)
	1414.2-1500	14.7 (0.58)	22.9 (0.90)	27.3 (1.08)

[a] The spacing between field wiring terminals of opposite polarity and between a wiring terminal and a grounded or exposed dead metal part shall not be less than 6.4 mm (1/4) if short circuiting or grounding of such terminals may results from projecting strands of wire.

[b] For the purpose of this requirement, a metal piece attached to the enclosure is considered to be a part of the enclosure if deformation of the enclosure is likely to reduce the spacing between the metal piece and uninsulated live parts.

[c] The spacing to a metal enclosure does not apply to the housing or frame of a device intended for installation with an end product enclosure.

[d] These spacings apply to the sum of the spacings involved whenever an isolated dead metal part is interposed.

[e] As specified in applicable sections covered by this Procedure, reduced spacings may be acceptable on a printed wiring board provided with a conformal coating that complies with the Standard for Polymeric Materials - Use in Electrical Equipment Evaluations, UL 746C; and are judged based on the tests performed.

[F] A printed wiring board intended to be completely encapsulated in an acceptable potting compound or epoxy shall not have any spacing less than 0.8 mm (1/32 inch.)

The spacings inherent in the Listed and/or R/C devices employed in this unit shall take precedence over the spacings mentioned above in situations where spacing requirements may conflict.

Wire Connections - All splices and soldered connections are made mechanically secure before soldering. Wiring through openings on printed wiring boards need not be mechanically secure before soldering. A lead is considered mechanically secured if it is:

a) Wrapped at least halfway (180 degrees) around a terminal,
b) Provided with at least one right angle bend when passed through an eyelet or opening, or
c) Twisted with other conductors.

Wiring Terminations - Listed, suitable for the number and AWG of wires. Assembled in accordance with manufacturer's specifications.

SIGNAL/REMOTE WIRING TERMINAL BLOCKS - Any (XCFR2, XCFR8 or CSA Certified) may be used provided they meet the following:

1. The catalog number, wire range, wire type, are suitable for field wiring, and torque value can be confirmed in the Recognized Component Directory.
2. There are no unique conditions of acceptability associated with the terminal block as noted in the Recognized Component Directory.
3. The terminal blocks are suitable for Industrial Use. Excludes terminal blocks intended for "Use Group B" as noted in the Recognized Component Directory (CA).
4. The terminal blocks are used within their marked electrical ratings as listed in the Recognized Component Directory (V, A).
5. The terminal blocks are mounted with electrical spacings being maintained.
6. Under the Conditions of Acceptability (CA), the temperature rating shall be a minimum of 105°C, eg. 2(105). Typically, Nos. 1-5 are standard CofA and can be referenced in the beginning of the guide card in the Recognized Component Directory under XCFR2.

RELAYS - Relays are NKCR2, NLDX2 or NRNT2, Recognized for industrial use and used within the ratings specified in the individual report are allowed for applications not exceeding a 40°C ambient. All Relays Recognized for non-industrial use or Relays used in an ambient exceeding 40°C require procedure description of Recognized Company's Name and Cat. No.

MARKINGS:

Unless otherwise described in the individual report, Recognized Components shall be marked with the below detailed markings. When there is insufficient room on the SPD, markings may be provided on the smallest unit packaging.

Additionally, markings other than the Recognized Company's name, UL File Number or trademark, distinctive catalog number, date code, factory ID (when applicable) and the UL Recognized Component Marking, may be provided on a stuffer sheet or in the client's published specifications.

Markings required by this Standard shall be permanent. A permanent marking shall be molded, die-stamped, paint-stenciled; stamped or etched metal that is permanently secured. A pressure-sensitive label system secured by adhesive shall be a PGDQ2 Marking and Labeling Systems, suitably rated for the applied surface, suitable for outdoor use if applicable, and be rated for use in an ambient range of 0-60˚C, unless otherwise stated in the individual procedure section.

Alternately, a pressure-sensitive label secured by adhesives may be a R/C Printing Materials, PGJI2. These label materials shall be marked with inking materials/methods, as detailed in the Recognized Component Directory. These label materials shall have the same ratings as mentioned above for PGDQ2.

Type 1, 2 or 3 (Canadian 4-1, 4-2 or 4-3) Component Assemblies — Shall include the Recognized Company's name, trademark, if specified below, or UL file number, distinctive catalog number, SPD Type 1, 2 or 3 / 4-1, 4-2 or 4-3 or Type 1, 2 or 3 SPD assembly (as applicable), electrical ratings noted below, date or period of manufacture not exceeding any three consecutive months which may be abbreviated or in a nationally acceptable code and the UL Recognized Component Marking.

For SPDs investigated to CSA C22.2 No. 269.4 and 269.5 the month and year of manufacture, as a minimum (date coding, serial numbers, or other equivalent means) shall be used.

Electrical Ratings:

- Operating voltage rating (volts)
- AC power frequency (Hz)
- For two-port SPD: load current rating (amperes) For Type 1 or 2 Component Assemblies: Maximum Continuous Operating Voltage (MCOV) Rating (volts), Nominal Discharge Current Rating (In) (amperes or kiloamperes) and Short Circuit Current Rating (SCCR)(amperes or kiloamperes)
- For Type 3 Component Assemblies: May be marked with Maximum Continuous Operating Voltage (MCOV) Rating (volts) and Nominal Discharge Current (In) (amperes or kiloamperes) when specified in the Electrical Ratings Table
- Voltage Protection Rating (VPR) (volts or kilovolts)

Type 4 Component Assemblies – Shall include the Recognized Company's name, trademark or UL file number, distinctive catalog number, electrical ratings noted below, date or period of manufacture not exceeding any three consecutive months which may be abbreviated or in a nationally acceptable code and the UL Recognized Component Marking.

For products investigated to CSA C22.2 No. 269.4 and 269.5 the month and year of manufacture, as a minimum (date coding, serial numbers, or other equivalent means) shall be used.

Electrical Ratings:

- Operating voltage rating (volts)
- AC power frequency (Hz)
- For two-port SPD: load current rating (amperes)
- Maximum Continuous Operating Voltage (MCOV) Rating (volts)
- Nominal Discharge Current Rating (In) (amperes or kiloamperes)
- Measured Limiting Voltage (MLV) (volts or kilovolts)

Type 5 – Same as for Type 4 Component Assemblies except electrical ratings may be provided in the Recognized Company's data sheets.

Grounding Connection Marking – A wire-binding screw intended for the connection of a grounding conductor shall be plainly identified, such as by being marked "G," "GR," "GND," "Ground," "Grounding," or the like; or by a marking on a wiring diagram provided on the product.

Neutral Connection Marking – A supply wiring terminal for connection of a neutral "grounded" conductor a shall be marked with a capital letter "N" provided adjacent to any terminal intended exclusively for connection of the primary neutral grounded conductor, if any. Alternatively, the neutral field-wiring terminal shall be substantially white in color and shall be easily distinguishable from the other terminals, or proper identification of the terminal for the connection of the neutral conductor shall be clearly shown in some other manner, such as on an attached wiring diagram. If wire leads are provided instead of terminals, the surface of the neutral conductor shall be finished to show white or natural grey color and shall be easily distinguishable from the other leads.

SCCR Marking - SPDs investigated to CSA-C22.2 No. 269.4 specified in applicable sections covered by this Procedure, shall be marked "For Use on circuits delivering up to _(a)_rms Amps." and "Prévu pour des circuits dont l'intensité est égale ou inférieure à _(a)_A eff.".

a) SCCR Rating of SPD

Exception: The marking is able to be on a separate sheet or in the installation instruction if there is not sufficient room on the device for the marking.

Serviceable Parts - SPDs investigated to CSA-C22.2 No. 269.4 that are intended to be serviced shall be marked where visible after installation with the word "WARNING" and "Risk of Electric Shock" and the following or equivalent text "Disconnect power before servicing. Service to be performed by qualified personnel only." and «AVERTISSEMENT RISQUE DE CHOC – COUPER L'ALIMENTATION AVANT D'ENTREPRENDRE LE DÉPANNAGE» or equivalent in a manner that is visible after installation.

Exception – This marking is able to be provided on a separate sheet or in the installation instructions if there is not sufficient space on the device for the marking.

No Serviceable Parts - SPDs investigated to CSA-C22.2 No. 269.4 that are not intended to be serviced shall be marked where visible after installation "No

Serviceable Parts” and « Aucune pièce remplaçable ou réparable» or similar wording.

Exception - This marking is able to be provided on a separate sheet or in the installation instructions if there is not sufficient space on the device for the marking.

Trademark - The following trademark or trade name, if any, may be used to identify products described in this Procedure in lieu of the Recognized Company name. The company identification is the Recognized Company's name or one of the following Trade names:

OPERATING INSTRUCTIONS

SPDs investigated to CSA-C22.2 No. 269.4 shall be provided with installation and operation instructions. These instructions may be on the SPD component assembly or in accompanying literature and shall include the following words: “Type 4 SPDs shall only be installed by a qualified person” and « Les dispositifs de protection contre les surtensions de type 4 ne doivent être installés que par une personne qualifiée. » or equivalent.

COVERAGE BASED ON CANADIAN STANDARDS (CUR):

For products investigated to Canadian National requirements, the following also applies:

Marking Requirements - These products are intended to be marketed in CANADA. Markings shall be based on the “MARKING” provisions of the Section General and each individual section within this volume.

The necessity for a bilingual marking (i.e. English and French) shall be determined by the Applicant/manufacturer depending upon which provinces in Canada the product will be marketed. When the product identification is also required in French, the French translation shall be consistent with the English version as described in each individual section. The above CSA Standard presently only requires bilingual marking of warning and cautionary statements when applicable. Unless specified otherwise, the products are not required to be marked with any warning or cautionary statements.

Where specified in a report, "CN" indicates that the component has been evaluated to Canadian requirements. The Field Representative shall confirm that the component has a Canadian UL Listing or Recognition Mark, or CSA Certification Mark. If the end-product (product covered by this report) does not bear the C-UL Mark, the CN reference may be disregarded.

DESCRIPTION

PRODUCT COVERED/ELECTRICAL RATINGS:

Cat No.	Coverage	SPD Type	VOLTS (V)	PH	AMPS (A)	AMB (˚C) Min.	AMB (˚C) Max.	MODE	VPR (Vpk)	MLV (Vpk)	MCOV (V)	Vn (Vdc)	In (kA)	Ext. Imp.	OCP	SCCR (kA)	Notes
FTR07D151K	USR/CNR269	5	95	1	N/A	-40	125	Ld-Ld	N/A	420	95	150	1	N/A	N/A	N/A	1,5a
FTR07D181K	USR/CNR269	5	115	1	N/A	-40	125	Ld-Ld	N/A	500	115	180	1	N/A	N/A	N/A	1,5a
FTR07D201K	USR/CNR269	5	130	1	N/A	-40	125	Ld-Ld	N/A	550	130	200	1	N/A	N/A	N/A	1,5a
FTR07D221K	USR/CNR269	5	140	1	N/A	-40	125	Ld-Ld	N/A	590	140	220	1	N/A	N/A	N/A	1,5a
FTR07D241K	USR/CNR269	5	150	1	N/A	-40	125	Ld-Ld	N/A	630	150	240	1	N/A	N/A	N/A	1,5a
FTR07D271K	USR/CNR269	5	175	1	N/A	-40	125	Ld-Ld	N/A	720	175	270	1	N/A	N/A	N/A	1,5a
FTR07D301K	USR/CNR269	5	190	1	N/A	-40	125	Ld-Ld	N/A	780	190	300	1	N/A	N/A	N/A	1,5a
FTR07D331K	USR/CNR269	5	210	1	N/A	-40	125	Ld-Ld	N/A	860	210	330	1	N/A	N/A	N/A	1,5a
FTR07D361K	USR/CNR269	5	230	1	N/A	-40	125	Ld-Ld	N/A	930	230	360	1	N/A	N/A	N/A	1,5a
FTR07D391K	USR/CNR269	5	250	1	N/A	-40	125	Ld-Ld	N/A	1010	250	390	1	N/A	N/A	N/A	1,5a
FTR07D431K	USR/CNR269	5	275	1	N/A	-40	125	Ld-Ld	N/A	1110	275	430	1	N/A	N/A	N/A	1,5a
FTR07D471K	USR/CNR269	5	300	1	N/A	-40	125	Ld-Ld	N/A	1210	300	470	1	N/A	N/A	N/A	1,5a
FTR07D511K	USR/CNR269	5	320	1	N/A	-40	125	Ld-Ld	N/A	1290	320	510	1	N/A	N/A	N/A	1,5a
FTR07D561K	USR/CNR269	5	350	1	N/A	-40	125	Ld-Ld	N/A	1410	350	560	1	N/A	N/A	N/A	1,5a
FTR07D621K	USR/CNR269	5	385	1	N/A	-40	125	Ld-Ld	N/A	1570	385	620	1	N/A	N/A	N/A	1,5a
FTR07D681K	USR/CNR269	5	420	1	N/A	-40	125	Ld-Ld	N/A	1740	420	680	1	N/A	N/A	N/A	1,5a
FTR07D751K	USR/CNR269	5	460	1	N/A	-40	125	Ld-Ld	N/A	1920	460	750	1	N/A	N/A	N/A	1,5a
FTR07D781K	USR/CNR269	5	485	1	N/A	-40	125	Ld-Ld	N/A	2040	485	780	1	N/A	N/A	N/A	1,5a
FTR07D821K	USR/CNR269	5	510	1	N/A	-40	125	Ld-Ld	N/A	2160	510	820	1	N/A	N/A	N/A	1,5a

PRODUCT COVERED/ELECTRICAL RATINGS: (CONT'D)

Cat No.	Coverage	SPD Type	VOLTS (V)	PH	AMPS (A)	AMB (˚C) Min.	AMB (˚C) Max.	MODE	VPR (Vpk)	MLV (Vpk)	MCOV (V)	Vn (Vdc)	In (kA)	Ext. Imp.	OCP	SCCR (kA)	Notes
FTR10D151K	USR/CNR269	5	95	1	N/A	-40	125	Ld-Ld	N/A	450	95	150	3	N/A	N/A	N/A	1,5a
FTR10D181K	USR/CNR269	5	115	1	N/A	-40	125	Ld-Ld	N/A	510	115	180	3	N/A	N/A	N/A	1,5a
FTR10D201K	USR/CNR269	5	130	1	N/A	-40	125	Ld-Ld	N/A	570	130	200	3	N/A	N/A	N/A	1,5a
FTR10D221K	USR/CNR269	5	140	1	N/A	-40	125	Ld-Ld	N/A	600	140	220	3	N/A	N/A	N/A	1,5a
FTR10D241K	USR/CNR269	5	150	1	N/A	-40	125	Ld-Ld	N/A	630	150	240	3	N/A	N/A	N/A	1,5a
FTR10D271K	USR/CNR269	5	175	1	N/A	-40	125	Ld-Ld	N/A	720	175	270	3	N/A	N/A	N/A	1,5a
FTR10D301K	USR/CNR269	5	190	1	N/A	-40	125	Ld-Ld	N/A	770	190	300	3	N/A	N/A	N/A	1,5a
FTR10D331K	USR/CNR269	5	210	1	N/A	-40	125	Ld-Ld	N/A	840	210	330	3	N/A	N/A	N/A	1,5a
FTR10D361K	USR/CNR269	5	230	1	N/A	-40	125	Ld-Ld	N/A	910	230	360	3	N/A	N/A	N/A	1,5a
FTR10D391K	USR/CNR269	5	250	1	N/A	-40	125	Ld-Ld	N/A	990	250	390	3	N/A	N/A	N/A	1,5a
FTR10D431K	USR/CNR269	5	275	1	N/A	-40	125	Ld-Ld	N/A	1100	275	430	3	N/A	N/A	N/A	1,5a
FTR10D471K	USR/CNR269	5	300	1	N/A	-40	125	Ld-Ld	N/A	1200	300	470	3	N/A	N/A	N/A	1,5a
FTR10D511K	USR/CNR269	5	320	1	N/A	-40	125	Ld-Ld	N/A	1290	320	510	3	N/A	N/A	N/A	1,5a
FTR10D561K	USR/CNR269	5	350	1	N/A	-40	125	Ld-Ld	N/A	1410	350	560	3	N/A	N/A	N/A	1,5a
FTR10D621K	USR/CNR269	5	385	1	N/A	-40	125	Ld-Ld	N/A	1570	385	620	3	N/A	N/A	N/A	1,5a
FTR10D681K	USR/CNR269	5	420	1	N/A	-40	125	Ld-Ld	N/A	1730	420	680	3	N/A	N/A	N/A	1,5a
FTR10D751K	USR/CNR269	5	460	1	N/A	-40	125	Ld-Ld	N/A	1910	460	750	3	N/A	N/A	N/A	1,5a
FTR10D781K	USR/CNR269	5	485	1	N/A	-40	125	Ld-Ld	N/A	2020	485	780	3	N/A	N/A	N/A	1,5a
FTR10D821K	USR/CNR269	5	510	1	N/A	-40	125	Ld-Ld	N/A	2130	510	820	3	N/A	N/A	N/A	1,5a
FTR10D911K	USR/CNR269	5	550	1	N/A	-40	125	Ld-Ld	N/A	2310	550	910	3	N/A	N/A	N/A	1,5a
FTR10D102K	USR/CNR269	5	625	1	N/A	-40	125	Ld-Ld	N/A	2650	625	1000	3	N/A	N/A	N/A	1,5a
FTR10D112K	USR/CNR269	5	680	1	N/A	-40	125	Ld-Ld	N/A	2900	680	1100	3	N/A	N/A	N/A	1,5a

PRODUCT COVERED/ELECTRICAL RATINGS: (CONT'D)

Cat No.	Coverage	SPD Type	VOLTS (V)	PH	AMPS (A)	AMB (˚C) Min.	AMB (˚C) Max.	MODE	VPR (Vpk)	MLV (Vpk)	MCOV (V)	Vn (Vdc)	In (kA)	Ext. Imp.	OCP	SCCR (kA)	Notes
FTR14D151K	USR/CNR269	5	95	1	N/A	-40	125	Ld-Ld	N/A	410	95	150	3	N/A	N/A	N/A	1,5a
FTR14D181K	USR/CNR269	5	115	1	N/A	-40	125	Ld-Ld	N/A	500	115	180	3	N/A	N/A	N/A	1,5a
FTR14D201K	USR/CNR269	5	130	1	N/A	-40	125	Ld-Ld	N/A	560	130	200	3	N/A	N/A	N/A	1,5a
FTR14D221K	USR/CNR269	5	140	1	N/A	-40	125	Ld-Ld	N/A	610	140	220	3	N/A	N/A	N/A	1,5a
FTR14D241K	USR/CNR269	5	150	1	N/A	-40	125	Ld-Ld	N/A	650	150	240	3	N/A	N/A	N/A	1,5a
FTR14D271K	USR/CNR269	5	175	1	N/A	-40	125	Ld-Ld	N/A	760	175	270	3	N/A	N/A	N/A	1,5a
FTR14D301K	USR/CNR269	5	190	1	N/A	-40	125	Ld-Ld	N/A	820	190	300	3	N/A	N/A	N/A	1,5a
FTR14D331K	USR/CNR269	5	210	1	N/A	-40	125	Ld-Ld	N/A	910	210	330	3	N/A	N/A	N/A	1,5a
FTR14D361K	USR/CNR269	5	230	1	N/A	-40	125	Ld-Ld	N/A	1000	230	360	3	N/A	N/A	N/A	1,5a
FTR14D391K	USR/CNR269	5	250	1	N/A	-40	125	Ld-Ld	N/A	1060	250	390	3	N/A	N/A	N/A	1,5a
FTR14D431K	USR/CNR269	5	275	1	N/A	-40	125	Ld-Ld	N/A	1140	275	430	3	N/A	N/A	N/A	1,5a
FTR14D471K	USR/CNR269	5	300	1	N/A	-40	125	Ld-Ld	N/A	1220	300	470	3	N/A	N/A	N/A	1,5a
FTR14D511K	USR/CNR269	5	320	1	N/A	-40	125	Ld-Ld	N/A	1280	320	510	3	N/A	N/A	N/A	1,5a
FTR14D561K	USR/CNR269	5	350	1	N/A	-40	125	Ld-Ld	N/A	1380	350	560	3	N/A	N/A	N/A	1,5a
FTR14D621K	USR/CNR269	5	385	1	N/A	-40	125	Ld-Ld	N/A	1520	385	620	3	N/A	N/A	N/A	1,5a
FTR14D681K	USR/CNR269	5	420	1	N/A	-40	125	Ld-Ld	N/A	1660	420	680	3	N/A	N/A	N/A	1,5a
FTR14D751K	USR/CNR269	5	460	1	N/A	-40	125	Ld-Ld	N/A	1820	460	750	3	N/A	N/A	N/A	1,5a
FTR14D781K	USR/CNR269	5	485	1	N/A	-40	125	Ld-Ld	N/A	1920	485	780	3	N/A	N/A	N/A	1,5a
FTR14D821K	USR/CNR269	5	510	1	N/A	-40	125	Ld-Ld	N/A	2020	510	820	3	N/A	N/A	N/A	1,5a
FTR14D911K	USR/CNR269	5	550	1	N/A	-40	125	Ld-Ld	N/A	2170	550	910	3	N/A	N/A	N/A	1,5a
FTR14D102K	USR/CNR269	5	625	1	N/A	-40	125	Ld-Ld	N/A	2450	625	1000	3	N/A	N/A	N/A	1,5a
FTR14D112K	USR/CNR269	5	680	1	N/A	-40	125	Ld-Ld	N/A	2650	680	1100	3	N/A	N/A	N/A	1,5a

PRODUCT COVERED/ELECTRICAL RATINGS: (CONT'D)

Cat No.	Coverage	SPD Type	VOLTS (V)	PH	AMPS (A)	AMB (˚C) Min.	AMB (˚C) Max.	MODE	VPR (Vpk)	MLV (Vpk)	MCOV (V)	Vn (Vdc)	In (kA)	Ext. Imp.	OCP	SCCR (kA)	Notes
FTR14D122K	USR/CNR269	5	750	1	N/A	-40	125	Ld-Ld	N/A	2910	750	1200	3	N/A	N/A	N/A	1,5a

PRODUCT COVERED/ELECTRICAL RATINGS: (CONT'D)

Cat No.	Coverage	SPD Type	VOLTS (V)	PH	AMPS (A)	AMB (˚C) Min.	AMB (˚C) Max.	MODE	VPR (Vpk)	MLV (Vpk)	MCOV (V)	Vn (Vdc)	In (kA)	Ext. Imp.	OCP	SCCR (kA)	Notes
FTR20D181K	USR/CNR269	5	115	1	N/A	-40	125	Ld-Ld	N/A	490	115	180	5	N/A	N/A	N/A	1,5a
FTR20D201K	USR/CNR269	5	130	1	N/A	-40	125	Ld-Ld	N/A	540	130	200	5	N/A	N/A	N/A	1,5a
FTR20D221K	USR/CNR269	5	140	1	N/A	-40	125	Ld-Ld	N/A	570	140	220	5	N/A	N/A	N/A	1,5a
FTR20D241K	USR/CNR269	5	150	1	N/A	-40	125	Ld-Ld	N/A	600	150	240	5	N/A	N/A	N/A	1,5a
FTR20D271K	USR/CNR269	5	175	1	N/A	-40	125	Ld-Ld	N/A	680	175	270	5	N/A	N/A	N/A	1,5a
FTR20D301K	USR/CNR269	5	190	1	N/A	-40	125	Ld-Ld	N/A	730	190	300	5	N/A	N/A	N/A	1,5a
FTR20D331K	USR/CNR269	5	210	1	N/A	-40	125	Ld-Ld	N/A	790	210	330	5	N/A	N/A	N/A	1,5a
FTR20D361K	USR/CNR269	5	230	1	N/A	-40	125	Ld-Ld	N/A	850	230	360	5	N/A	N/A	N/A	1,5a
FTR20D391K	USR/CNR269	5	250	1	N/A	-40	125	Ld-Ld	N/A	910	250	390	5	N/A	N/A	N/A	1,5a
FTR20D431K	USR/CNR269	5	275	1	N/A	-40	125	Ld-Ld	N/A	1010	275	430	5	N/A	N/A	N/A	1,5a
FTR20D471K	USR/CNR269	5	300	1	N/A	-40	125	Ld-Ld	N/A	1110	300	470	5	N/A	N/A	N/A	1,5a
FTR20D511K	USR/CNR269	5	320	1	N/A	-40	125	Ld-Ld	N/A	1190	320	510	5	N/A	N/A	N/A	1,5a
FTR20D561K	USR/CNR269	5	350	1	N/A	-40	125	Ld-Ld	N/A	1310	350	560	5	N/A	N/A	N/A	1,5a
FTR20D621K	USR/CNR269	5	385	1	N/A	-40	125	Ld-Ld	N/A	1440	385	620	5	N/A	N/A	N/A	1,5a
FTR20D681K	USR/CNR269	5	420	1	N/A	-40	125	Ld-Ld	N/A	1580	420	680	5	N/A	N/A	N/A	1,5a
FTR20D751K	USR/CNR269	5	460	1	N/A	-40	125	Ld-Ld	N/A	1740	460	750	5	N/A	N/A	N/A	1,5a
FTR20D781K	USR/CNR269	5	485	1	N/A	-40	125	Ld-Ld	N/A	1830	485	780	5	N/A	N/A	N/A	1,5a
FTR20D821K	USR/CNR269	5	510	1	N/A	-40	125	Ld-Ld	N/A	1930	510	820	5	N/A	N/A	N/A	1,5a
FTR20D911K	USR/CNR269	5	550	1	N/A	-40	125	Ld-Ld	N/A	2080	550	910	5	N/A	N/A	N/A	1,5a
FTR20D102K	USR/CNR269	5	625	1	N/A	-40	125	Ld-Ld	N/A	2360	625	1000	5	N/A	N/A	N/A	1,5a
FTR20D112K	USR/CNR269	5	680	1	N/A	-40	125	Ld-Ld	N/A	2570	680	1100	5	N/A	N/A	N/A	1,5a
FTR20D122K	USR/CNR269	5	750	1	N/A	-40	125	Ld-Ld	N/A	2830	750	1200	5	N/A	N/A	N/A	1,5a

Notes:
1. Suitable for Factory wiring only.
2. Suitable for Field and Factory wiring.
3. Series External Impedance required see Electrical Ratings in report.
4. Series External Overcurrent Protection required see Electrical Ratings in report.
5. Body of discrete component metal-oxide varistors (MOVs) flammability
   a) min. V-0 or VTM-0.
   b) min. V-1 or VTM-1.
   c) Complies with IEC 60950-1, Edition 2.2, Annex Q/IEC62368-1 Annex G.8.2 needle flame testing requirements.
   d) Complies with IEC 60065, Edition 7.2, Annex G.1.1 needle flame testing requirements.

Additional Details Regarding Electrical Ratings:

NA: Not Applicable

Coverage:

USR - Indicates evaluation to the applicable requirements of the U.S. National Standard: UL 1449, Surge Protective Devices, Fourth Edition.

CNR269 - Indicates evaluation to the applicable Canadian Requirements of CSA C22.2 No. 269.5-17, Surge protective devices - Type 5 - Components.

SPD TYPE: 1CA = Type 1 Component Assembly (USR)/4-1(CNR), 2CA= Type 2 Component Assembly (USR)/4-2(CNR), 3CA = Type 3 Component Assembly (USR)/4-3(CNR), 4CA = Type 4 Component Assembly (USR)/Type 5 SPD (CNR), 5 = Type 5 SPD, ACC = SPD Accessory.

VOLTS (V): The rated operating voltage of the SPD.

PH: Phase. 1 = Single Phase Alternating Current (50/60 Hz); 1S = Split Single Phase Alternating Current (50/60 Hz); 3Y = Three Phase Wye Alternating Current (50/60 Hz); 3H = Three Phase Hi-Leg Delta Alternating Current (50/60 Hz); 3D = Three Phase Delta Alternating Current (50/60 Hz); DC = Direct Current; DC PV = Direct Current for use in photovoltaic applications only.

AMPS (A): Amperage - Applies to two-port SPDs only.

AMB (°C) Min./Max.: Minimum and Maximum Ambient Temperature Rating of SPD.

MODE: Refers to the pair of electrical connections (terminals) between which the specified ratings apply. Ld = Lead, L = Line, N = Neutral, G = Ground,
H = High Leg, DC+ = DC Positive, DC- = DC Negative.

VPR (Vpk): Voltage Protection Rating (VPR) — Types 1, 2 and 3 Component Assemblies Only.

MLV (Vpk): Measured Limited Voltage (MLV) - Type 4 Component Assemblies and Type 5 SPD Only.

MCOV (V): The maximum continuous operating voltage.

Vn (Vdc): Nominal Varistor Voltage at 1 ma dc with a +/- 10 % voltage tolerance - Type 4 Component Assemblies and Type 5 SPDs Only. Type 4 Component Assemblies and Type 5 SPDs that would be damaged by the 1.0 mA dc current may have been subjected to the Metal Oxide Varistor Voltage Test with a dc current less than 1.0 mA. Check the Conditions of Acceptability below for additional details.

In (kA): Nominal Discharge Current Rating, kA.

Ext. Imp: Series External Impedance - Voltage Switching Type SPDs such as Gap Type SPDs that otherwise permit follow current were subjected to testing in series with the following specified impedance to limit "follow current" and are investigated for use only with the specified impedance: N/A = Not Applicable.

Series External Impedance						
Resistor			Metal Oxide Varistor (VZCA2)			
Designation	Ohms (Ω)	Min. Watt (W)	Designation	Manufacturer	Cat. No	UL File
R1			MOV1			E
R2			MOV2			E
R3			MOV3			E

OCP: Series External Overcurrent Protection - When specified, the overcurrent/branch circuit protective device used during testing, as applicable. Circuit Breaker Mfg and Type only detailed when Current Limiting CB is required. Fuse Mfg and Type not specified when any suitably rated fuse of that Class may be used.
F = Fuse, CB = Circuit Breaker, N/A = Not Applicable.

Designation	Current Rating (A)		Current Limiting CB Only:		Fuse				Min. AIC Rating (kA)
	Min.	Max.	Manufacturer	Type	Fuse Class	Manufacturer	Type or Cat. No.	UL File	
CB1									
CB2									
CB3									
F1								E	
F2								E	
F3								E	

SCCR(kA): Short Circuit Current Rating in kA. Type 1 and 2 Component Assemblies Only.

Details Regarding Adjunct Electrical Ratings:

When specified, the body of discrete component metal-oxide varistors (MOVs) have been additionally investigated for flammability with respect to the following: V-0, VTM-0, V-1 or VTM-1 flammability rating, for compliance with IEC 60950-1, Edition 2.2, Annex Q/IEC62368-1 Annex G.8.2 needle flame testing requirements and/or for compliance with IEC 60065, Edition 7.2, Annex G.1.1 needle flame testing requirements.

TECHNICAL CONSIDERATIONS (NOT FOR FIELD REPRESENTATIVE'S USE):

Use - For use only in (or with) complete equipment, where the acceptability of the combination is determined by UL LLC.

CONDITIONS OF ACCEPTABILITY:

1. MLV values provided are for reference only and cannot represent the VPR of an end-product, as final installation, construction, and internal wiring of an end-product may affect the VPR.

2. Voltage Protection Rating (VPR) shall be determined in the end-product where they are applicable. VPR values provided are for reference only and cannot represent the VPR of an end-product, as final installation, construction, and internal wiring of an end-product may affect the VPR.

3. SPDs designated as Type 4CA and Type 5 SPDs have not been subjected to the SCCR and Intermediate Current Testing as required by ANSI/UL 1449/Abnormal overvoltage – Short circuit and intermediate current behavior tests in CSA C22.2 No. 269.4. The suitability of these devices to comply with these tests in the end-use application shall be determined. If the integral thermal responsive device opens during Testing (in the end-use application) the test needs to be conducted two more times and subjected to annual follow-up.

4. SPDs designated as Type 5 SPDs have not been subjected to the Limited Current Abnormal Overvoltage Test as required by UL 1449/Abnormal overvoltage - Limited current behavior tests in CSA C22.2 No 269.4. The suitability of these devices to comply with these tests in the end-use application shall be determined.

5. SPDs with Note 1 indicated in the electrical ratings table are intended for factory wiring only with the suitability of the connections (including spacings between factory connectors) determined in the end-use application.

6. When "SCCR" is detailed in the Electrical Ratings Table, the following is required to be marked on the end-product enclosure: "Suitable for Use on a Circuit Capable of delivering Not More Than (a) rms Symmetrical Amperes, (b) Volts Maximum." (a) = SCCR Rating, (b) = Rated Voltage of SPD Component.

7. Where discreet component SPDs connect to the end-product, suitability of spacings at that location shall be evaluated in accordance with the end-product spacing requirements.

CONSTRUCTION DETAILS:

General - For details of construction, reference should be made to the Section General, the following paragraphs and accompanying descriptive indices. All dimensions are approx. unless specified as "max" or "min".

Markings - As detailed in Section General.

MANUFACTURING PROCESS:

1. See ILL. 1 for details.
2. Final inspection and testing. Units must conduct 1 mA when subjected to the direct-current potential indicated in the following table.

Cat. No. (Model suffix)	Min. DC Voltage	Specified Nominal Voltage (V dc)	Max. DC Voltage
151	135	150	165
181	162	180	198
201	180	200	220
221	198	220	242
241	216	240	264
271	243	270	297
301	270	300	330
331	297	330	363
361	324	360	396
391	351	390	429
431	387	430	473
471	423	470	517
511	459	510	561
561	504	560	616
621	558	620	682
681	612	680	748
751	675	750	825
781	702	780	858
821	738	820	902
911	819	910	1001
102	900	1000	1100
112	990	1100	1210
122	1080	1200	1320

VARISTORS - CAT. NOS. 07D, 10D, 14D, 20D Series

Fig.	Represents	Ill.	Represents
1	Overall View of models	1	Manufacturing Process
		2	Overall Dimensions

1. Lead Wire Terminals – Two provided, tin-plated steel wire, extend minimum 1 mm in length from Coating Material. Soldered to electrode. Various terminal type, see Fig. 1 and ILL. 2 for details.

2. Coating Material – See the following tabulation for manufacturer, material designation and grade:

QMFZ2 UL File	Manufacturer	Material Designation	Grade	Generic Type	Coating Minimum Thickness
E212333	Tianjin Kaihua Insulation Material Co Ltd	EF-160(XX)	V-0, 130°C	Epoxy resin	0.3 mm

3. Electrodes – Two provided, Copper material, screened on each side of Resistive Disk.

MOV Series	Minimum Distance from edge of disk to edge of electrode (mm)
FTR07D	0.1
FTR10D	0.1
FTR14D	0.1
FTR20D	0.1

4. Resistive Disc (Not shown) - One provided, Zinc oxide. See table below for the detailed dimensions.

SPD Cat. No.	Uncoated Thickness (mm)			Uncoated Diameter (mm)		
	Min.	Typical	Max.	Min.	Typical	Max.
FTR07D151K	0.60	0.75	0.90	6.17	6.85	7.54
FTR07D181K	0.72	0.90	1.08	6.17	6.85	7.54
FTR07D201K	0.80	1.00	1.20	6.17	6.85	7.54
FTR07D221K	0.88	1.10	1.32	6.17	6.85	7.54
FTR07D241K	0.96	1.20	1.44	6.17	6.85	7.54
FTR07D271K	1.08	1.35	1.62	6.17	6.85	7.54
FTR07D301K	1.20	1.50	1.80	6.17	6.85	7.54
FTR07D331K	1.32	1.65	1.98	6.17	6.85	7.54
FTR07D361K	1.44	1.80	2.16	6.17	6.85	7.54
FTR07D391K	1.56	1.95	2.34	6.17	6.85	7.54
FTR07D431K	1.72	2.15	2.58	6.17	6.85	7.54
FTR07D471K	1.88	2.35	2.82	6.17	6.85	7.54
FTR07D511K	2.04	2.55	3.06	6.17	6.85	7.54
FTR07D561K	2.24	2.80	3.36	6.17	6.85	7.54
FTR07D621K	2.48	3.10	3.72	6.17	6.85	7.54
FTR07D681K	2.72	3.40	4.08	6.17	6.85	7.54
FTR07D751K	3.00	3.75	4.50	6.17	6.85	7.54
FTR07D781K	3.12	3.90	4.68	6.17	6.85	7.54
FTR07D821K	3.28	4.10	4.92	6.17	6.85	7.54

SPD Cat. No.	Uncoated Thickness (mm)			Uncoated Diameter (mm)		
	Min.	Typical	Max.	Min.	Typical	Max.
FTR10D151K	0.60	0.75	0.90	9.54	10.60	11.66
FTR10D181K	0.72	0.90	1.08	9.54	10.60	11.66
FTR10D201K	0.80	1.00	1.20	9.54	10.60	11.66
FTR10D221K	0.88	1.10	1.32	9.54	10.60	11.66
FTR10D241K	0.96	1.20	1.44	9.54	10.60	11.66
FTR10D271K	1.08	1.35	1.62	9.54	10.60	11.66
FTR10D301K	1.20	1.50	1.80	9.54	10.60	11.66
FTR10D331K	1.32	1.65	1.98	9.54	10.60	11.66
FTR10D361K	1.44	1.80	2.16	9.54	10.60	11.66
FTR10D391K	1.56	1.95	2.34	9.54	10.60	11.66
FTR10D431K	1.72	2.15	2.58	9.54	10.60	11.66
FTR10D471K	1.88	2.35	2.82	9.54	10.60	11.66
FTR10D511K	2.04	2.55	3.06	9.54	10.60	11.66
FTR10D561K	2.24	2.80	3.36	9.54	10.60	11.66
FTR10D621K	2.48	3.10	3.72	9.54	10.60	11.66
FTR10D681K	2.72	3.40	4.08	9.54	10.60	11.66
FTR10D751K	3.00	3.75	4.50	9.54	10.60	11.66
FTR10D781K	3.12	3.90	4.68	9.54	10.60	11.66
FTR10D821K	3.28	4.10	4.92	9.54	10.60	11.66
FTR10D911K	3.64	4.55	5.46	9.54	10.60	11.66
FTR10D102K	4.00	5.00	6.00	9.54	10.60	11.66
FTR10D112K	4.40	5.50	6.60	9.54	10.60	11.66

SPD Cat. No.	Uncoated Thickness (mm)			Uncoated Diameter (mm)		
	Min.	Typical	Max.	Min.	Typical	Max.
FTR14D151K	0.60	0.75	0.90	13.49	14.20	14.91
FTR14D181K	0.72	0.90	1.08	13.49	14.20	14.91
FTR14D201K	0.80	1.00	1.20	13.49	14.20	14.91
FTR14D221K	0.88	1.10	1.32	13.49	14.20	14.91
FTR14D241K	0.96	1.20	1.44	13.49	14.20	14.91
FTR14D271K	1.08	1.35	1.62	13.49	14.20	14.91
FTR14D301K	1.20	1.50	1.80	13.49	14.20	14.91
FTR14D331K	1.32	1.65	1.98	13.49	14.20	14.91
FTR14D361K	1.44	1.80	2.16	13.49	14.20	14.91
FTR14D391K	1.56	1.95	2.34	13.49	14.20	14.91
FTR14D431K	1.72	2.15	2.58	13.49	14.20	14.91
FTR14D471K	1.88	2.35	2.82	13.49	14.20	14.91
FTR14D511K	2.04	2.55	3.06	13.49	14.20	14.91
FTR14D561K	2.24	2.80	3.36	13.49	14.20	14.91
FTR14D621K	2.48	3.10	3.72	13.49	14.20	14.91
FTR14D681K	2.72	3.40	4.08	13.49	14.20	14.91
FTR14D751K	3.00	3.75	4.50	13.49	14.20	14.91
FTR14D781K	3.12	3.90	4.68	13.49	14.20	14.91
FTR14D821K	3.28	4.10	4.92	13.49	14.20	14.91
FTR14D911K	3.64	4.55	5.46	13.49	14.20	14.91
FTR14D102K	4.00	5.00	6.00	13.49	14.20	14.91
FTR14D112K	4.40	5.50	6.60	13.49	14.20	14.91
FTR14D122K	4.80	6.00	7.20	13.49	14.20	14.91

SPD Cat. No.	Uncoated Thickness (mm)			Uncoated Diameter (mm)		
	Min.	Typical	Max.	Min.	Typical	Max.
FTR20D181K	0.72	0.90	1.08	18.24	19.20	20.16
FTR20D201K	0.80	1.00	1.20	18.24	19.20	20.16
FTR20D221K	0.88	1.10	1.32	18.24	19.20	20.16
FTR20D241K	0.96	1.20	1.44	18.24	19.20	20.16
FTR20D271K	1.08	1.35	1.62	18.24	19.20	20.16
FTR20D301K	1.20	1.50	1.80	18.24	19.20	20.16
FTR20D331K	1.32	1.65	1.98	18.24	19.20	20.16
FTR20D361K	1.44	1.80	2.16	18.24	19.20	20.16
FTR20D391K	1.56	1.95	2.34	18.24	19.20	20.16
FTR20D431K	1.72	2.15	2.58	18.24	19.20	20.16
FTR20D471K	1.88	2.35	2.82	18.24	19.20	20.16
FTR20D511K	2.04	2.55	3.06	18.24	19.20	20.16
FTR20D561K	2.24	2.80	3.36	18.24	19.20	20.16
FTR20D621K	2.48	3.10	3.72	18.24	19.20	20.16
FTR20D681K	2.72	3.40	4.08	18.24	19.20	20.16
FTR20D751K	3.00	3.75	4.50	18.24	19.20	20.16
FTR20D781K	3.12	3.90	4.68	18.24	19.20	20.16
FTR20D821K	3.28	4.10	4.92	18.24	19.20	20.16
FTR20D911K	3.64	4.55	5.46	18.24	19.20	20.16
FTR20D102K	4.00	5.00	6.00	18.24	19.20	20.16
FTR20D112K	4.40	5.50	6.60	18.24	19.20	20.16
FTR20D122K	4.80	6.00	7.20	18.24	19.20	20.16

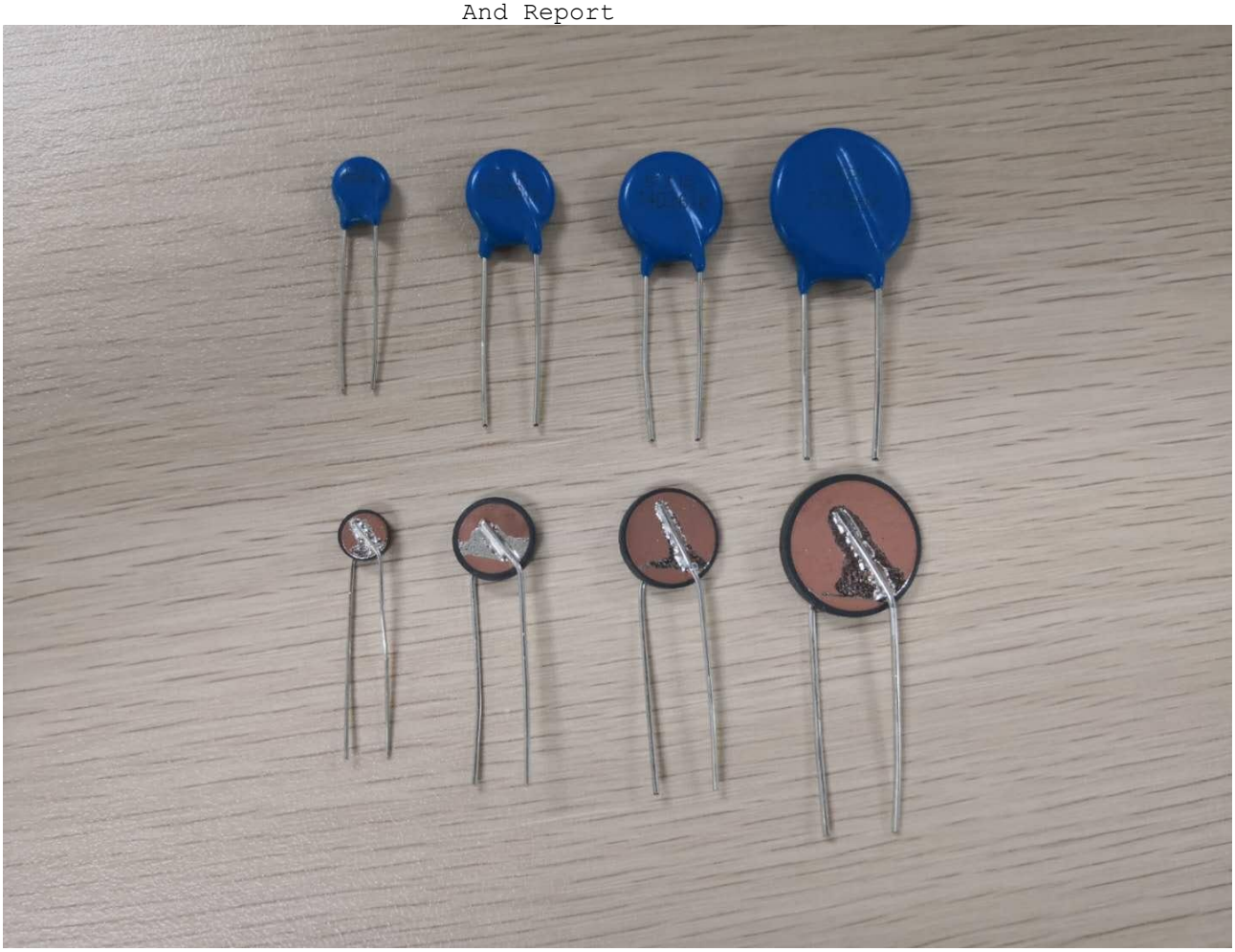

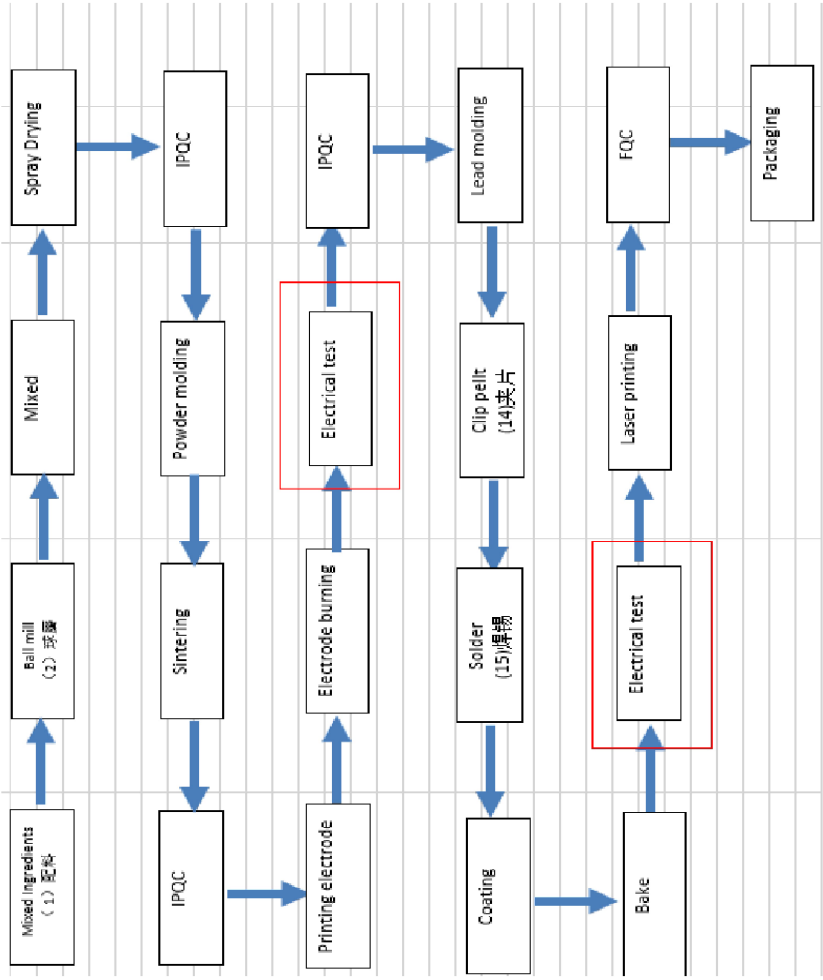
Mixed ingredients
（1）配料
Ball mill
（2）球磨
Mixed
Spray Drying
IPQC
Sintering
Powder molding
IPQC
Printing electrode
Electrode burning
Electrical test
IPQC
Coating
Solder
(15)焊锡
Clip pellt
(14)夹片
Lead molding
Bake
Electrical test
Laser printing
FQC
Packaging

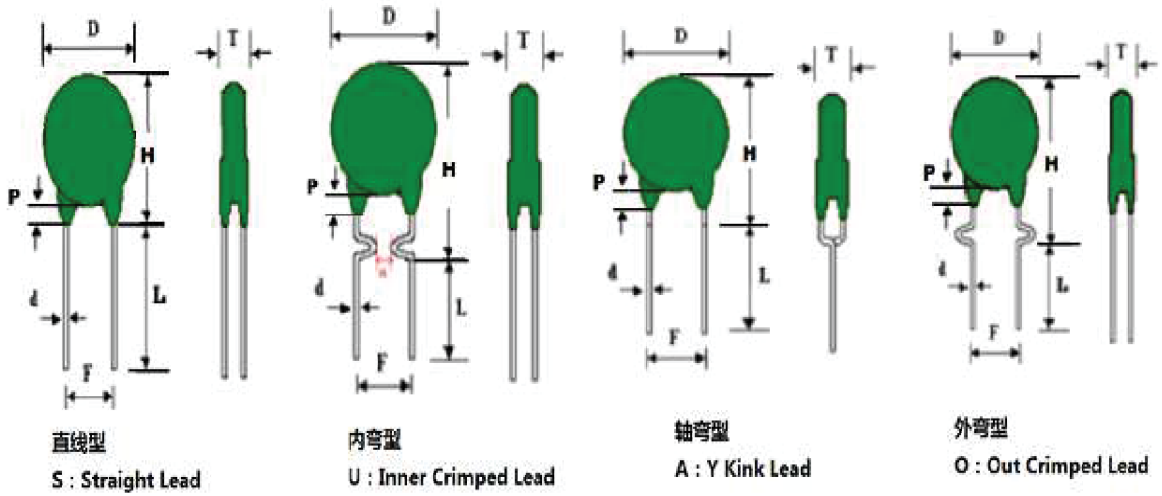

Cat. No.1 型号1	Finished Product dimension (mm) (tolerance shall keep in ± 20%) MOV整体尺寸							
	Diameter, D(mm)	Thickness, T(mm)	Length, H(mm)	Length of lead, L(mm)	Diameter of lead, d(mm)	Space, F(mm)	Space, a(mm)	Length,P(mm)
				Minimum	±0.05mm	±1mm	Minimum	Maximum
FTR07D151K	8.0	3.0	10.5	2.5	0.60	5.0	2.5	2.5
FTR07D181K	8.0	3.1	10.5	2.5	0.60	5.0	2.5	2.5
FTR07D201K	8.0	3.2	10.5	2.5	0.60	5.0	2.5	2.5
FTR07D221K	8.0	3.3	10.5	2.5	0.60	5.0	2.5	2.5
FTR07D241K	8.0	3.4	10.5	2.5	0.60	5.0	2.5	2.5

FTR07D271K	8.0	3.6	10.5	2.5	0.60	5.0	2.5	2.5
FTR07D301K	8.0	3.7	10.5	2.5	0.60	5.0	2.5	2.5
FTR07D331K	8.0	3.9	10.5	2.5	0.60	5.0	2.5	2.5
FTR07D361K	8.0	4.0	10.5	2.5	0.60	5.0	2.5	2.5
FTR07D391K	8.0	4.2	10.5	2.5	0.60	5.0	2.5	2.5
FTR07D431K	8.0	4.4	10.5	2.5	0.60	5.0	2.5	2.5
FTR07D471K	8.0	4.6	10.5	2.5	0.60	5.0	2.5	2.5
FTR07D511K	8.0	4.8	10.5	2.5	0.60	5.0	2.5	2.5
FTR07D561K	8.0	5.0	10.5	2.5	0.60	5.0	2.5	2.5
FTR07D621K	8.0	5.3	10.5	2.5	0.60	5.0	2.5	2.5
FTR07D681K	8.0	5.6	10.5	2.5	0.60	5.0	2.5	2.5
FTR07D751K	8.0	6.0	10.5	2.5	0.60	5.0	2.5	2.5
FTR07D781K	8.0	6.1	10.5	2.5	0.60	5.0	2.5	2.5
FTR07D821K	8.0	6.3	10.5	2.5	0.60	5.0	2.5	2.5
FTR10D151K	12.5	3.4	15.0	2.5	0.80	7.5	5.0	2.5
FTR10D181K	12.5	3.6	15.0	2.5	0.80	7.5	5.0	2.5
FTR10D201K	12.5	3.7	15.0	2.5	0.80	7.5	5.0	2.5
FTR10D221K	12.5	3.8	15.0	2.5	0.80	7.5	5.0	2.5
FTR10D241K	12.5	3.9	15.0	2.5	0.80	7.5	5.0	2.5
FTR10D271K	12.5	4.1	15.0	2.5	0.80	7.5	5.0	2.5

FTR10D301K	12.5	4.3	15.0	2.5	0.80	7.5	5.0	2.5
FTR10D331K	12.5	4.5	15.0	2.5	0.80	7.5	5.0	2.5
FTR10D361K	12.5	4.7	15.0	2.5	0.80	7.5	5.0	2.5
FTR10D391K	12.5	4.8	15.0	2.5	0.80	7.5	5.0	2.5
FTR10D431K	12.5	5.1	15.0	2.5	0.80	7.5	5.0	2.5
FTR10D471K	12.5	5.3	15.0	2.5	0.80	7.5	5.0	2.5
FTR10D511K	12.5	5.6	15.0	2.5	0.80	7.5	5.0	2.5
FTR10D561K	12.5	5.9	15.0	2.5	0.80	7.5	5.0	2.5
FTR10D621K	12.5	6.2	15.0	2.5	0.80	7.5	5.0	2.5
FTR10D681K	12.5	6.6	15.0	2.5	0.80	7.5	5.0	2.5
FTR10D751K	12.5	7.0	15.0	2.5	0.80	7.5	5.0	2.5
FTR10D781K	12.5	7.2	15.0	2.5	0.80	7.5	5.0	2.5
FTR10D821K	12.5	7.4	15.0	2.5	0.80	7.5	5.0	2.5
FTR10D911K	12.5	8.0	15.0	2.5	0.80	7.5	5.0	2.5
FTR10D102K	12.5	8.5	15.0	2.5	0.80	7.5	5.0	2.5
FTR10D112K	12.5	9.1	15.0	2.5	0.80	7.5	5.0	2.5
FTR14D151K	15.0	3.4	17.0	2.5	0.80	7.5	5.0	2.5
FTR14D181K	15.0	3.6	17.0	2.5	0.80	7.5	5.0	2.5
FTR14D201K	15.0	3.7	17.0	2.5	0.80	7.5	5.0	2.5
FTR14D221K	15.0	3.8	17.0	2.5	0.80	7.5	5.0	2.5

FTR14D241K	15.0	3.9	17.0	2.5	0.80	7.5	5.0	2.5
FTR14D271K	15.0	4.1	17.0	2.5	0.80	7.5	5.0	2.5
FTR14D301K	15.0	4.3	17.0	2.5	0.80	7.5	5.0	2.5
FTR14D331K	15.0	4.5	17.0	2.5	0.80	7.5	5.0	2.5
FTR14D361K	15.0	4.7	17.0	2.5	0.80	7.5	5.0	2.5
FTR14D391K	15.0	4.8	17.0	2.5	0.80	7.5	5.0	2.5
FTR14D431K	15.0	5.1	17.0	2.5	0.80	7.5	5.0	2.5
FTR14D471K	15.0	5.3	17.0	2.5	0.80	7.5	5.0	2.5
FTR14D511K	15.0	5.6	17.0	2.5	0.80	7.5	5.0	2.5
FTR14D561K	15.0	5.9	17.0	2.5	0.80	7.5	5.0	2.5
FTR14D621K	15.0	6.2	17.0	2.5	0.80	7.5	5.0	2.5
FTR14D681K	15.0	6.6	17.0	2.5	0.80	7.5	5.0	2.5
FTR14D751K	15.0	7.0	17.0	2.5	0.80	7.5	5.0	2.5
FTR14D781K	15.0	7.2	17.0	2.5	0.80	7.5	5.0	2.5
FTR14D821K	15.0	7.4	17.0	2.5	0.80	7.5	5.0	2.5
FTR14D911K	15.0	8.0	17.0	2.5	0.80	7.5	5.0	2.5
FTR14D102K	15.0	8.5	17.0	2.5	0.80	7.5	5.0	2.5
FTR14D112K	15.0	9.1	17.0	2.5	0.80	7.5	5.0	2.5
FTR14D122K	15.0	9.7	17.0	2.5	0.80	7.5	5.0	2.5
FTR20D181K	20.5	4.0	23.5	2.5	1.0	10.0	7.5	3.0

FTR20D201K	20.5	4.1	23.5	2.5	1.0	10.0	7.5	3.0
FTR20D221K	20.5	4.2	23.5	2.5	1.0	10.0	7.5	3.0
FTR20D241K	20.5	4.3	23.5	2.5	1.0	10.0	7.5	3.0
FTR20D271K	20.5	4.5	23.5	2.5	1.0	10.0	7.5	3.0
FTR20D301K	20.5	4.7	23.5	2.5	1.0	10.0	7.5	3.0
FTR20D331K	20.5	4.9	23.5	2.5	1.0	10.0	7.5	3.0
FTR20D361K	20.5	5.1	23.5	2.5	1.0	10.0	7.5	3.0
FTR20D391K	20.5	5.2	23.5	2.5	1.0	10.0	7.5	3.0
FTR20D431K	20.5	5.5	23.5	2.5	1.0	10.0	7.5	3.0
FTR20D471K	20.5	5.7	23.5	2.5	1.0	10.0	7.5	3.0
FTR20D511K	20.5	6.0	23.5	2.5	1.0	10.0	7.5	3.0
FTR20D561K	20.5	6.3	23.5	2.5	1.0	10.0	7.5	3.0
FTR20D621K	20.5	6.6	23.5	2.5	1.0	10.0	7.5	3.0
FTR20D681K	20.5	7.0	23.5	2.5	1.0	10.0	7.5	3.0
FTR20D751K	20.5	7.4	23.5	2.5	1.0	10.0	7.5	3.0
FTR20D781K	20.5	7.6	23.5	2.5	1.0	10.0	7.5	3.0
FTR20D821K	20.5	7.8	23.5	2.5	1.0	10.0	7.5	3.0
FTR20D911K	20.5	8.4	23.5	2.5	1.0	10.0	7.5	3.0
FTR20D102K	20.5	8.9	23.5	2.5	1.0	10.0	7.5	3.0
FTR20D112K	20.5	9.5	23.5	2.5	1.0	10.0	7.5	3.0

FTR20D122K	20.5	10.1	23.5	2.5	1.0	10.0	7.5	3.0