SPECIFICATIONS FOR APPROVAL

ITEM	Metallized Polypropylene Film Capacitor
PART NO.	**CBB21 475K630V P27.5 MP475K630DP27.5-001**

Metallized Polypropylenen Film Capacitor	(Date): 2023/04/17

1 Dimension (mm) Form 1

item	CAP (uF)	R. V (VDC)	DF (1KHZ) ≦%	TOL ±%	Product Dimensions						
					W (max)	H (max)	T (max)	P (±0.8)	L (±2)	φd± 0.05	
MP475K630DP27.5-001	4.7uF	630V	0.10	10	31	27.5	17	27.5	22	0.8	V

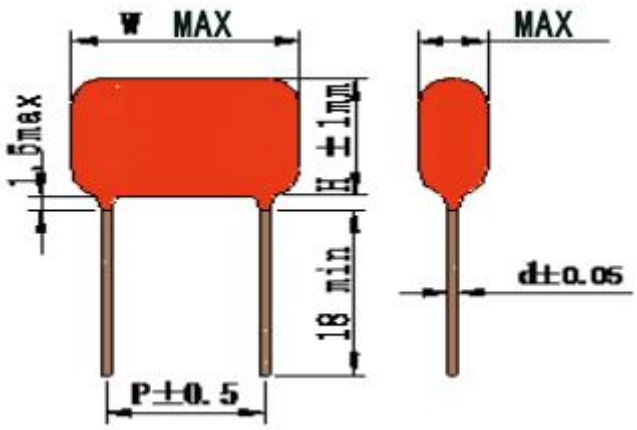

(laser printing)
CBB21
475K630V

(Code)	I	II	III	IV	V	X
(Forming shapes)	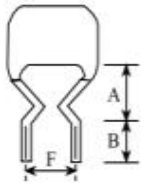	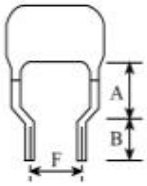	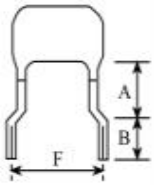	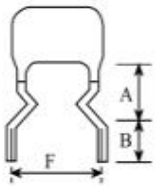	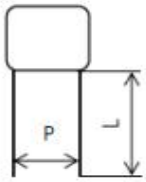	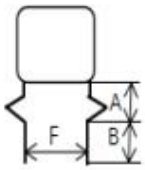
(Applicable range)	P≥F		P≤F		P	P=F
	0mm≤P-F ≤3mm	3mm≤P-F ≤8mm	3mm≤F-P ≤5mm	0mm≤F-P ≤3mm		
(Dimcnsionstandard)	A≤5.0mm; B allow deviation±0.5mm; F allow deviation±1.0mm;					

Product features and Usage

Product features:

1, Mini Size , Good self healing;

2. Low loss at high frequency ,low temperature rise;High impact strength;

3. Good pressure resistance and durability during High frequency ac

1.2 The main purpose:

High frequency, direct current, alternating current and pulse high current situations.Such as: lamps, monitor equipment, power supply, etc

2. Reference standard

GB2693

IEC384-1

GB10190

SJ/T10353

GB2693

IEC384-1

GB10190 《Fixed capacitors for electronic equipment Part 1: Part specification: Metallized

polypropylene film dielectric dc fixed capacitor》;

SJ/T10353 《Detailed specification for electronic components : CBB21Type Metallized polypropylene film dielectric dc fixed capacitor Evaluate level E》;

3. Number rule and product naming method

3.1 Number rule

3.11 Capacitance code representation method:

code	102	103	104	105
μF	0.001	0.01	0.1	1.0

3.12 Capacitance tolerance :

tolerance	±2%	±5%	±10%	±20%
symbol	G	J	K	M

4. Shape marks and geometric dimensions

4.1 Capacitors marks can be marked

1. Product model; 2. Nominal capacitance; 3. Allowable capacitance deviation; 4. Rated voltage,

For example

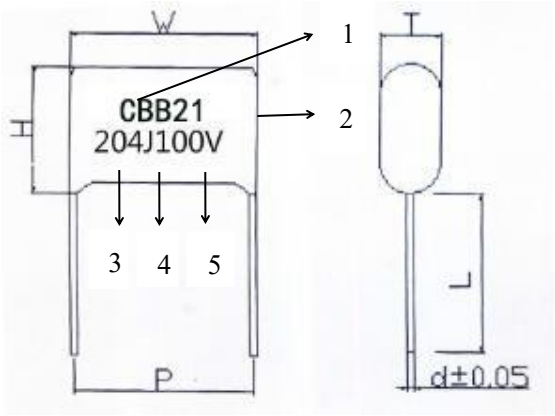

4.2 Cosmetic requirement

The mark is correct clear and readable no obvious damage, pinhole bubble, the outlet line have no serious damage.

4.3 Structure drawing

1. Metallized polypropylene film

1. pray metallized layer

2. CP Wire

3. Epoxy resin

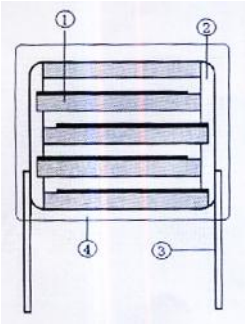

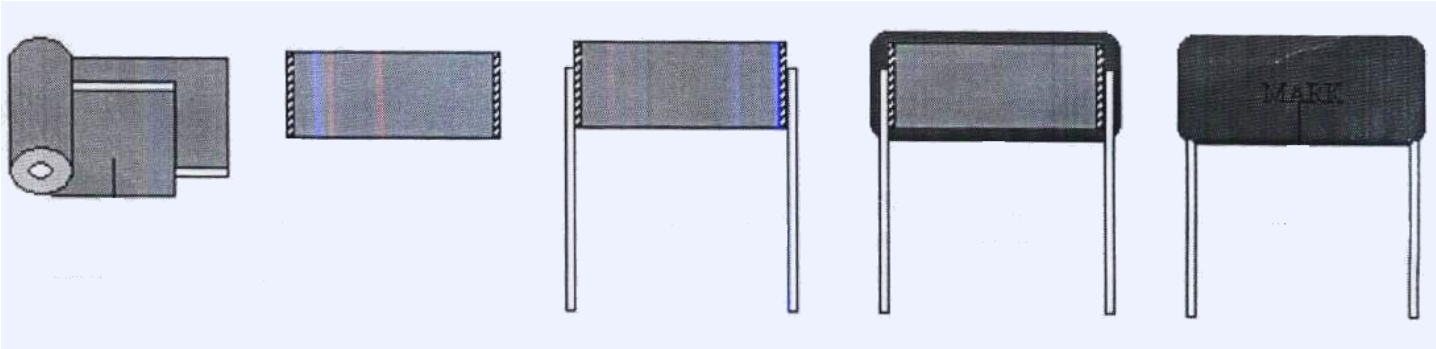

5. Technical re uirement（Form 2q）

NO	article	performance requirement		test method
5.1	temperature range	- 40℃~+105℃		
5.2	related voltage U_RDC	100V 250V、400V、450V、630V、1000V		
5.3	Capacitance range	0.0010μF ~8.2μF		
5.4	Capacitance tolerance deviation	J(±5%)　K(±10%)		1KHz，1V
5.5	Loss tangent	tgδ≤0.1%　(20℃±5　1KHz)		20℃±　1KHz，1V
5.6	Withstand voltage	between the pins	No breakdown or arc	testing voltage：1.5UR, duration time：1~5sec

		pins and outside	No breakdown or arc	testing voltage：2UR, duration time：60sec
5.7	Insulation resistance	C≤0.33μF, ≥15000MΩ C＞0.33μF, ≥7500S		100V charge 1min
5.8	Weld ability	The tin area Beyond 90%		1Welding groove method Ta，Way 1 Solder temperature：260±5℃ Dipping time：2.0±0.5S
5.9	appearance	a. pores, bubbles, white. b. Lead is no long paint, no oxidation, no bending, the same length, the same diameter. c. d. Clear and correct marking is in the middle, no ink, no characters, etc.		visual inspection

6. Test re uirements: Form 3

NO	article	Performance requirements	Test method
6.1	Initial measurement	Capacitance Loss tangent: 1KHz	
	Leading-out strength	The appearance have No visible damage	Pull test: Ua1: Pull: 0.5 < φd≤0.8mm; 10N Bend test Ub: Double bending torsion in each direction; Double successive torsion 180°
	Welding heat resistant	appearance have No visible damage, clear mark	Welding groove method Tb, Way 1A, 260±5%, 10±1S
	Last measurement	capacitance: I △C/C I≤5% Tgδ Increase ≤0.004 (1KHz)	
6.2		1KHz	

	Initial measurement	Capacitance , Loss tangent, 1KHz	
	Rapid temperature change	the appearance have No visible damage	0_A= - 40℃, 0=+105℃ 5cycles, duration time: t=30min
	vibration	the appearance have No visible damage	Amplitude 0.75mm Or acceleration 98m/s^2 (Take the less severe) , frequency 10~500Hz Three Direction , each direction 2h, Total 6h

NO	article		Performance requirements	Test way
6.2	collision		the appearance have No visible damage	4000 Times , acceleration 390m/s^2 Pulse duration : 6ms
	Last measurement		capacitance: I △C/C I≤5% Loss tangent : tgδ Increase ≤0.004 Insulation resistance IR: ≥ Rating 50%	
6.3	Climate Orderly	initial measurement	Capacitance Loss tangent: 1KHz	
		Hot		+105℃, 16h
				Test Db, Severe degree b, First

		hot and humid Circulating		cycle
		Cold		-40℃，2h
		Low depression	no permanent breakdown，Harmful deformation of arc or undercasing	15~35℃，8.5Kpa,1h At the last test 5 minutes , UR was applied
		hot and humid Circulating		Test Db，Severe degree b， rest cycle，at the end of the trial, URwas applied 1 minute
		Last measurement	appearance have No visible damage ,Clear mark capacitance ：I △C/C I ≤10% Loss tangent：tgδ ≤0.004 Tgδ increasing ≤0.004 IR：C≤0.33μF, ≥ 3500MΩ	

			C > 0.33μF, ≥ 1000S	
6.4	humid hot of Voltage stabilizing		the appearance have No visible damage ,Clear mark capacitance: I △C/C I ≤10% Loss tangent: tg δ: ≤0.003 IR: C≤0.33μF, ≥ 3500MΩ C > 0.33μF, ≥1000S	temperature: 40±2℃ humidity: 93 %RH applied voltage: UR duration time: 500 小 (hours)
6.5	durability		the appearance have No visible damage ,Clear mark capacitance: I △C/C I ≤10% Loss tangent: tg δ: ≤0.003 阻 IR: C≤0.33μF, ≥ 3500MΩ	+85℃, 1000h applied voltage : 1.1× UR rate voltage

		C > 0.33μF, ≥1000S	
6.6	characteristic changed by temperature	characteristics In the lower limit of Category temperature -40 ℃ ： 0≤△C/C≤±3% characteristics In the upper limit of Category temperature 105℃ ： -4%≤△C/C≤0	Statically, the capacitors are kept in turn at each of the following temperatures： a. (20±2℃) b. (-40±3℃) d. (20±2℃) f. (105±2℃) g. (20±2℃)

7.

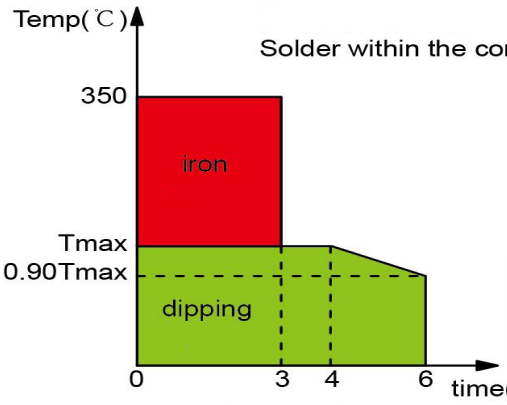

Solder within the conditions mentioned in the following diagram.

	Tmax	Time	Note
Pre-heating	110℃	1min	
	100℃	1min	MPP P≤7.5
Soldering	270℃	4s	
	260℃	4s	MPP P≤7.5

If re-working or dipping twice in necessary, it should be done after the capacitor returned to the normal temparature.

During manual welding, MPP film capacitor is the worst temperature resistance component among all components, please pay special attention to the welding time, try not to exceed 5 seconds, solder spot as far as possible from the body, in addition, it is not suitable for reflow welding, otherwise the product will cause performance problems due to the thermal shrinkage of the film;

Wave soldering, capacitor is not horizontal installation, direct plug PC board is appropriate, to prevent soldering, tin wave scald capacitor internal materials; It is recommended not to cover the solder carrier, reduce the temperature of capacitor through the tin furnace as far as possible; The temperature of the third stage of preheating is between 80-100℃, and the temperature is 260℃+/-5. (The lower the temperature, the safer) soldering time within 5S; (double wave soldering total time) Solder process should not stop/stuck

material, resulting in long soldering time and soldering time of finished plate, resulting in potential risks of scald; (For other soldering methods, follow this requirement)

temperature of metallized film capacitor ≧85℃, keep away from high-heat components to prevent the heat of other components from affecting the normal operation of the capacitor.

Ratio of capacitor operating temperature to rated voltage reduction

Soldering Temperature VS Time

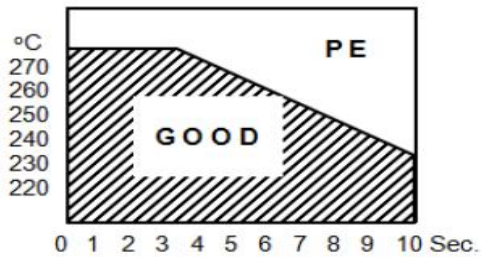

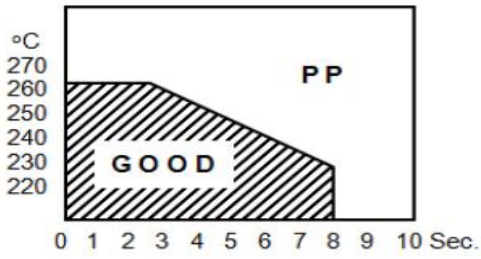

Frequency Characteristics

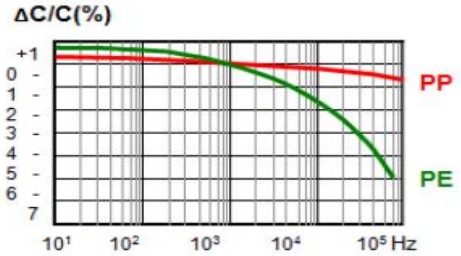

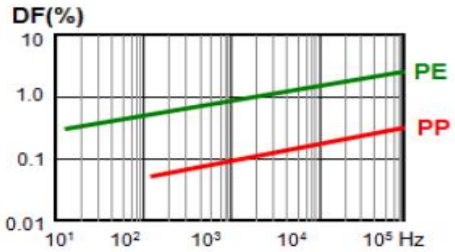

Temperature Characteristics

ΔC/C(%) at 1KHz

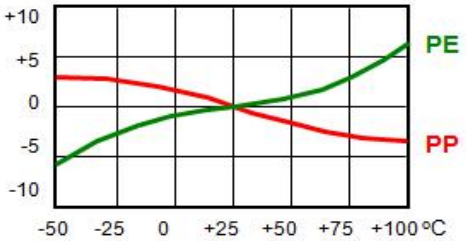

DF(%) at 1KHz

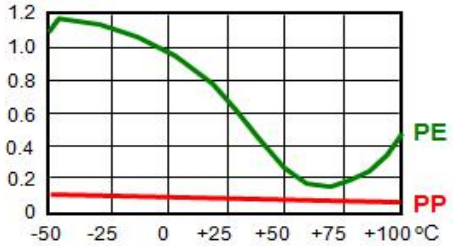

Vn(%)

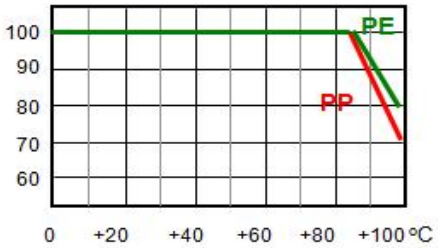

I.R.(MOhm)