1. PART NUMBER IDENTIFICATION

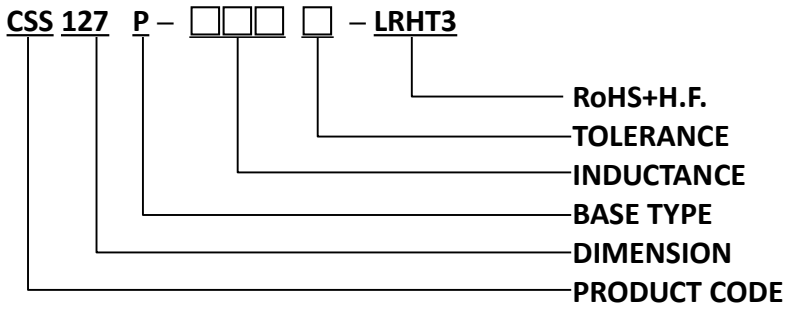

2. MECHANICAL DIMENSION

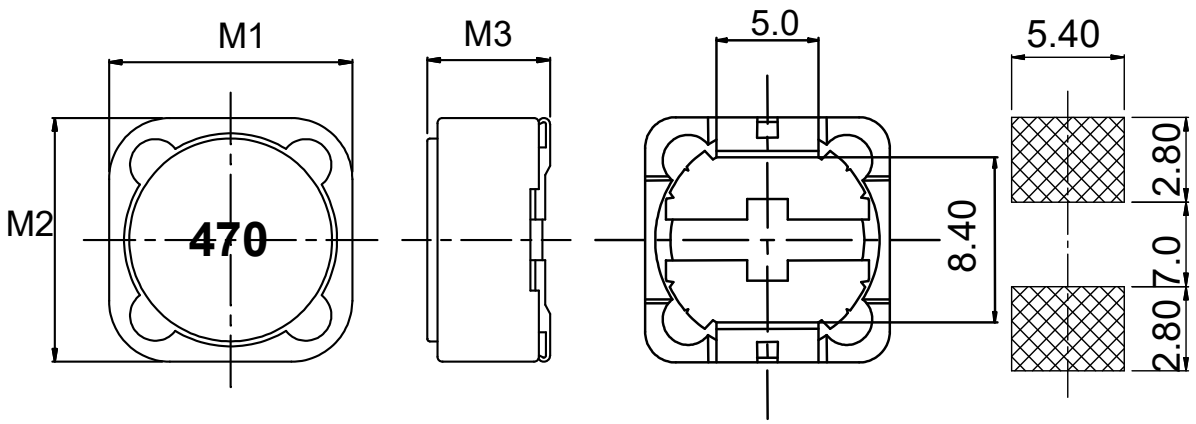

SERIES	M1	M2	M3
CSS127P-470M-LRHT3	12.0±0.3	12.0±0.3	8.0 MAX.

3. MARKING

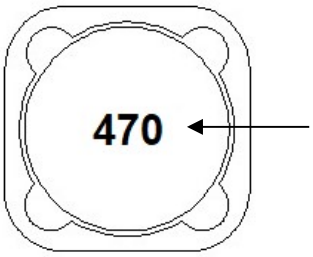

Example: 470 Stands for Marking ➔ 47µH

4. ELECTRICAL SPECIFICATION

Part number	Marking	Inductance (uH)	Test Frequency (KHz)	DC Resistance (Ω) MAX.	Rated Current (A)
CSS127P-470M-LRHT3	470	47 ±20%	1	0.1000	2.50

1.Tolerance: M±20%, N±30%
2. Operating Temperature Range: -25℃ to +125℃.
3. Storage Temperature Range: -25℃ to +85℃.
4. Inductance measured using the HP4284A LCR meter, CHROMA 3302/1320/16502.
5. DC Resistance measured using the 16502 milli-ohm meter.
6. Inductance drops no more than 25 % of initial value at rated current, temperature rises △t< 40℃.
7.MSL: LEVEL 1.

5.MATERIAL LIST

ITEM	MATERIAL CATEGORY	MATERIAL TYPE	SGS NO.	UL NO.
a	WIRE	SOLDERABLE ENAMELED COPPER WIRE OR EQUIV.	CE/2019/B1280	E174837
b	CORE	FERRITE OR EQUIV.		
c	INSULATION TAPE	PHENOLIC OR EQUIV		E50292 E17385
d	ADHESIVE	EPOXY RESIN OR EQUIV.		
e	TERMINAL	-		
f	SOLDER	Pb FREE OR EQUIV.		

6. RELIABILITY PERFORMANCE

Reliability Experiment For Electrical

Test Item	Accept criteria	Test Condition	Standard Source
Humidity Test	1.Change from an initial value L:within±5% 2.no visible damage.	+40℃± 2℃, humidity of 90% ±5% (total 96 hours).	MIL-STD-202H Method 103 Test Condition B
High Temperature Test	1.Change from an initial value L:within±5% 2.no visible damage.	1.Temperature: +125℃±2℃. 2.Test time: 72±2hrs.	IEC 68-2 Test Condition B
Low Temperature Test	1.Change from an initial value L:within±5% 2.no visible damage.	1.Temperature: -25℃±2℃. 2.Test time: 72±2hrs.	IEC 68-2 Test Condition A
Thermal Shock	1.Change from an initial value L:within±5% 2.no visible damage.	+125℃±5℃ (30 minutes) ~ -65±5℃ (30 minutes), temperature switch time: 5 minutes (total 50 cycles).	Reference MIL-STD-202H Method 107 Test Condition B-2
Life Test	1.Change from an initial value L:within±5% 2.no visible damage.	+70℃±5℃ (250Hours).	Reference MIL-STD-202H Method 108 Test Condition B

Reliability Experiment For Physical

Test Item	Accept criteria	Test Condition	Standard Source
Vibration Test	1.Change from an initial value L:within±5% 2.no visible damage.	10-55-10HZ, amplitude: 1.5mm, direction: X, Y, Z axes, each axis 2 hours (total 6 hours).	MIL-STD-202H Method 201
Solder Heat Resistance Test	1.no visible damage.	IR/convection reflow: Peak Temp 250±5℃ for 30±5Sec. in air, Through 3 Cycle. Temperature Ramp:+1~4°C/sec.; Above 183°C, must keep 90 s - 120 s.	Reference MIL-STD-202H Method 210 Test Condition K (Reflow)
Solder Ability Test	1. Lead must have 95% above coverage.	Solder temp: 245±5℃, Immersion time: 5 second. Immersion rate: 25±6mm/sec.	J-STD-002D Test condition B1

7. REFLOW CHART

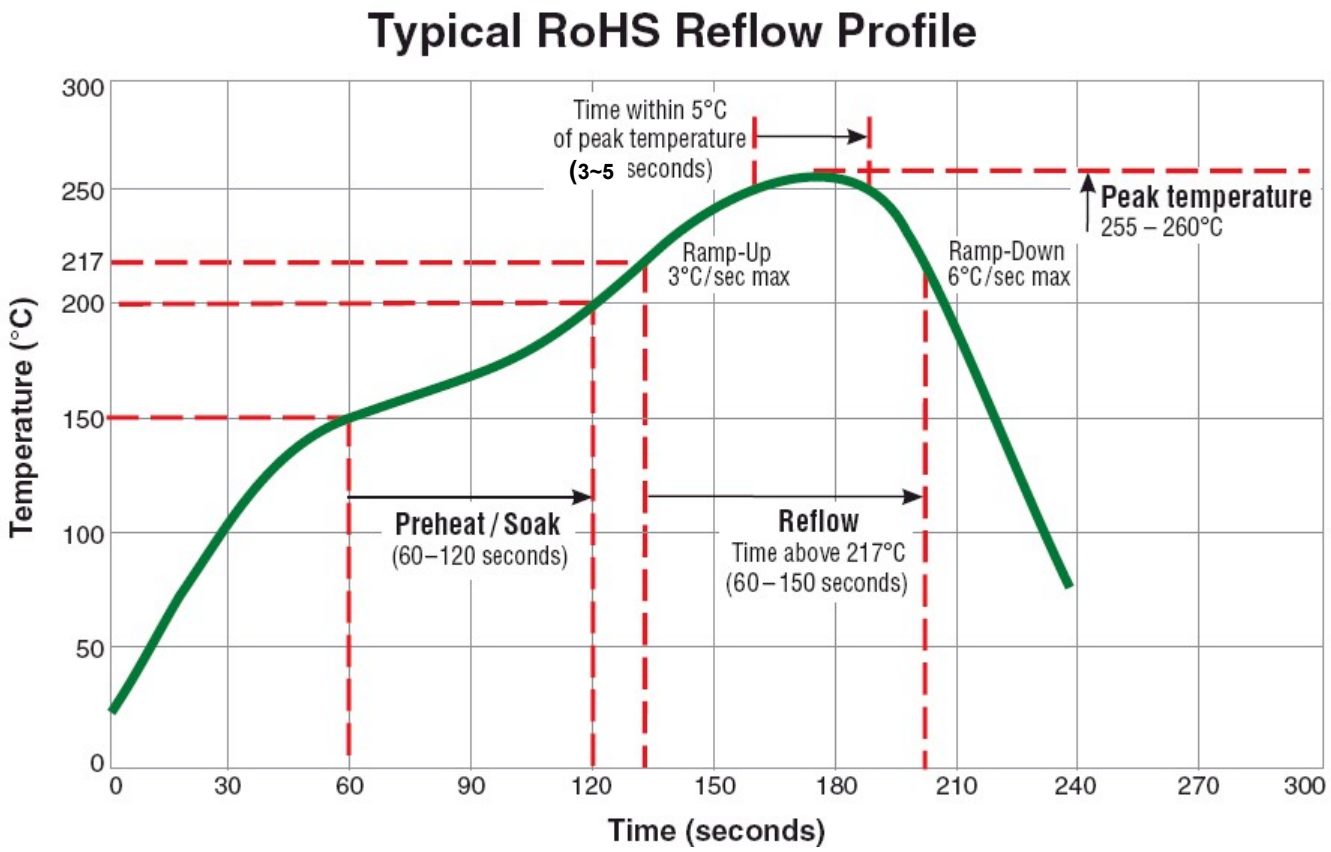

8. PACKING

- THE FORCE FOR TEARING OFF COVER TAPE IS 10 TO 130 GRAMS IN THE ARROW DIRECTION.

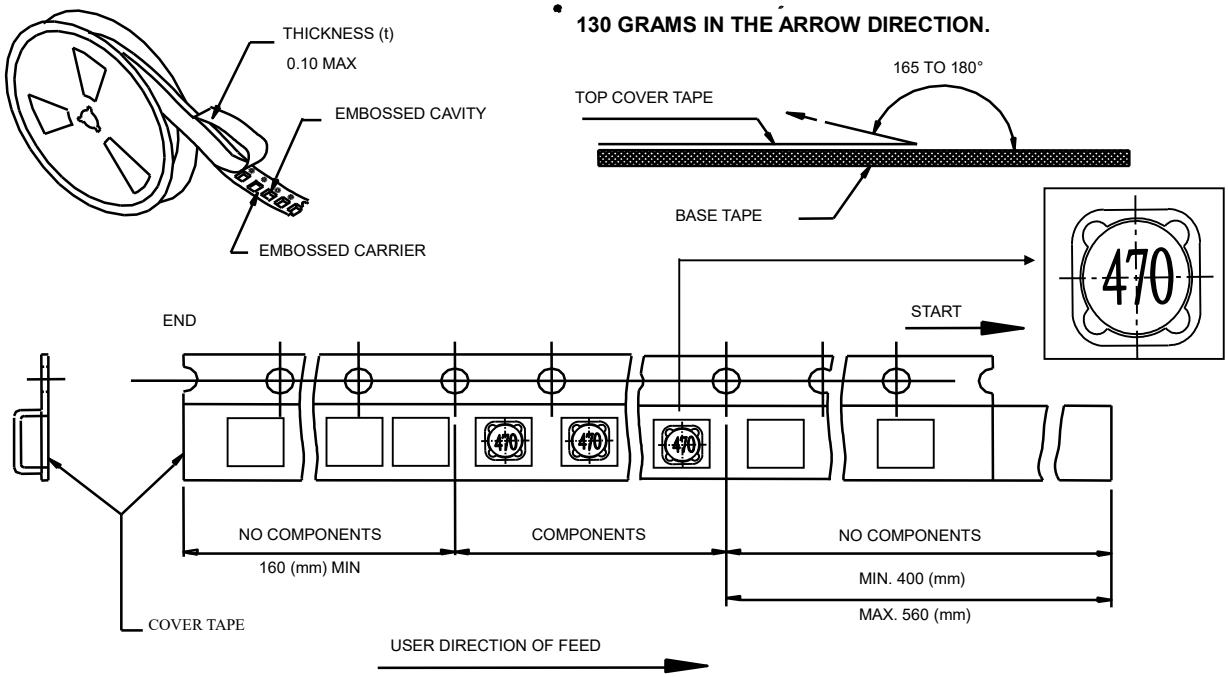

CARRIER TAPE REELS (mm)

MATERIAL: PLASTIC

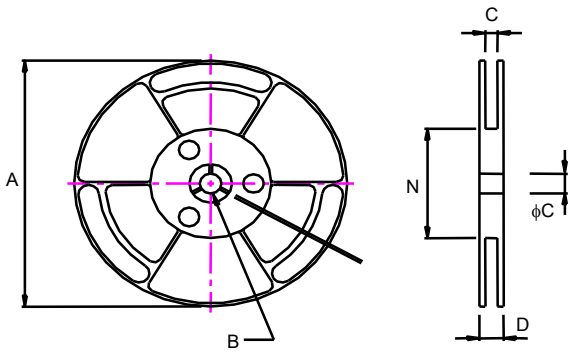

DIMENSIONS OF CARRIER TAPE (mm)

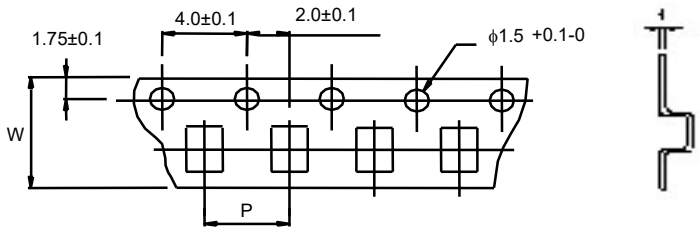

UNIT:mm

	A	B	C	D	N	P	W	t
DIM.	340	13.0	24.5	30.5	100	16.0	24.0	0.35
TOL.	MAX	±0.5	+1.5-0	MAX	±0.3	±1.0	±0.3	±0.05

UNIT : mm

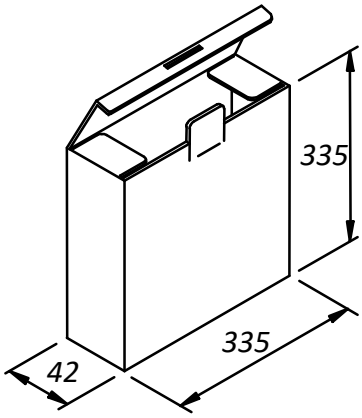

- CONSTURCTION:
  THE CASE CONTAINS 24mm WIDE CARRIER TAPES.
  Q'TY : 500 / REEL

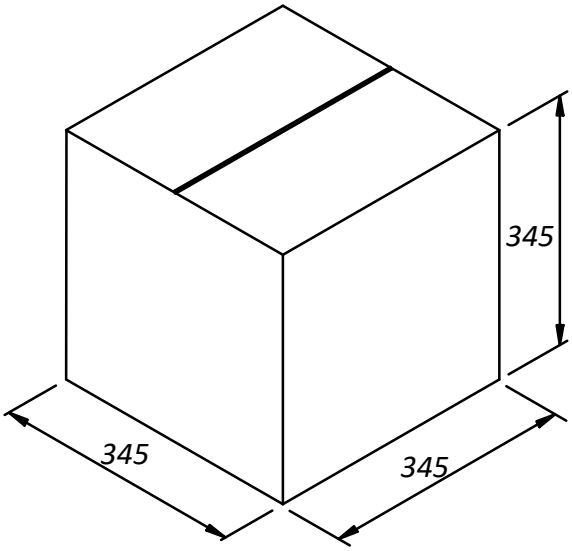

TOTAL Q'TY :4,000PCS