Product Specification

CUSTOMER : _____

CUSTOMER PN PN: _____

AKYGA PASSIVE P/N : **XC21M4-32.000-F10NNFT-R60G**

MODEL : **Crystal unit SMD 2.0x1.6 seam seal**

NOMINAL FREQUENCY : **32.000MHz**

ISSUE DATE : **2022 / 08 / 08**

Revision	Description / ECN	Prepared	Approved	Date
1	Initial release			2022-08-08
2	Not issued			
3	Not issued			
4	Not issued			

1. NOMINAL AND MAXIMUM RATINGS, OPERATING AND STORAGE CONDITIONS

	PARAMETER	SYMB.	MIN	TYP	MAX	Unit	Conditions / Remarks
1	Nominal frequency	F_N		**32.000**		MHz	--
2	Vibration mode	---		FUNDAMENTAL			--
3	Load capacitance	CL		10.0		pF	--
4	Drive level	DL		10	200	µW	--
5	Operating temperature range	T_{OP}	–30	+25	+85	°C	Note 1
6	Storage Temperature Range	T_{ST}	–55		+125	°C	--

Note 1: Unit stays within all relevant parameter limits as specified under point 2 below.

2. ELECTRICAL PARAMETER LIMITS

	PARAMETER	SYMB.	MIN	TYP	MAX	Unit	Conditions / Remarks
1	Frequency tolerance	$\Delta f/F_N$	–10		+10	ppm	Offset from F_N at +25°C
2	Frequency stability	$\Delta f/f$	–10		+10	ppm	Note 1
3	Aging first year	$(\Delta f/f)_{A1}$	–3.0		+3.0	ppm	at +25°C and 10µW
4	Shunt capacitance	C0			2.0	pF	at +25°C and 10µW
5	Equivalent series resistance	ESR			60	Ω	at +25°C / 10µW / @Series
6	Insulation resistance	IR	500			MΩ	at 100±15V_{DC}

Note 1: Frequency stability is the frequency deviation over operating temperature range T_{OP} in reference to the frequency reading at +25°C.

3. PRODUCT MARKING

1	**FF.fff**	Nominal frequency in MHz (three digits after decimal point)											
2													
3	**Y**	Year code of manufacturing (see table below)											
	Year	2021	2022	2023	2024	2025	2026	2027	2028	2029	2030	2031	2032
	Code	V	W	X	Y	Z	A	B	C	D	E	F	G
4	**M**	Month code of manufacturing (see table below)											
	Month	Jan	Feb	Mar	Apr	May	Jun	Jul	Aug	Sep	Oct	Nov	Dec
	Code	A	B	C	D	E	F	G	H	J	K	L	M

4. OUTLINE DRAWING

	Package description	Package model	Remarks
1	Seam seal SMD package 2.0x1.6mm with 4 pads	CSX2016p4	--

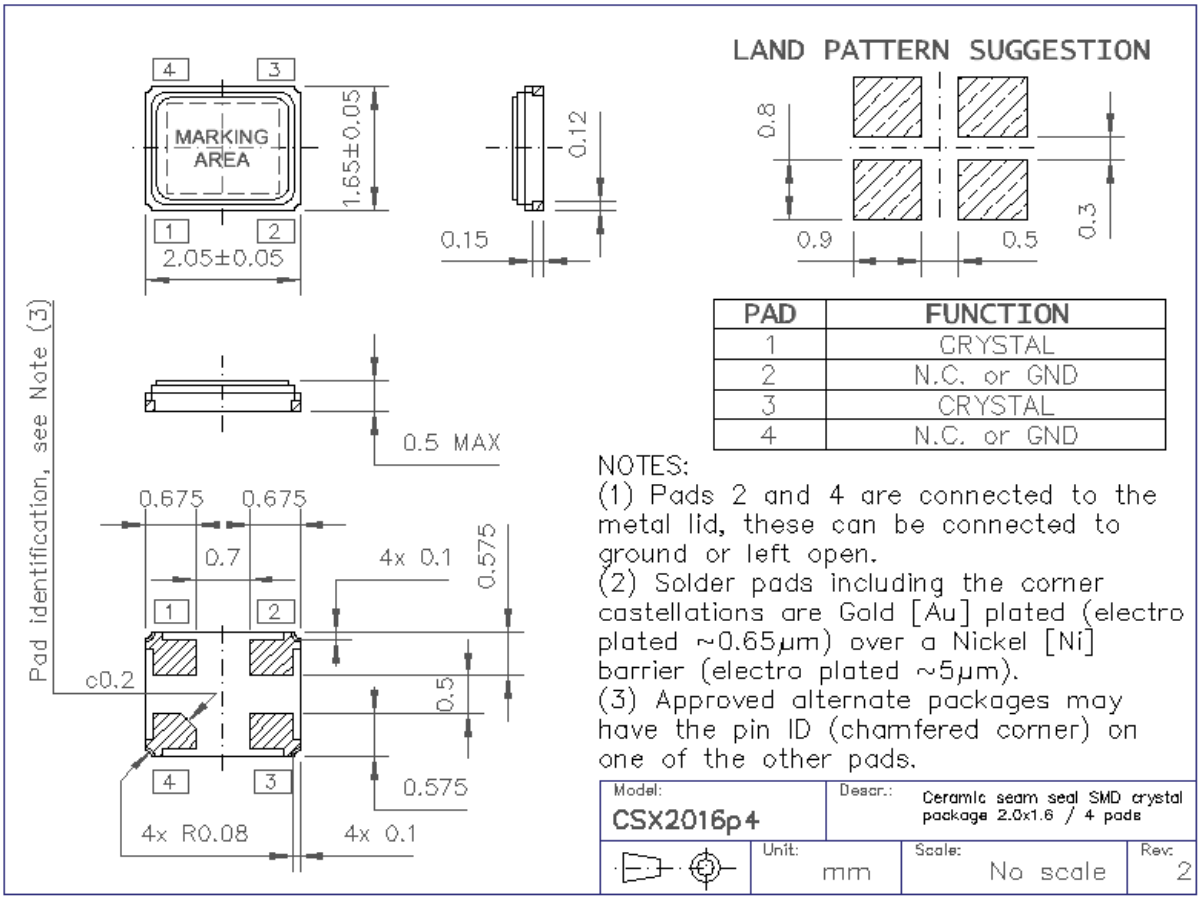

5. RELIABILITY TEST INFORMATION

	Test item	Test method	Criteria
1	Temperature Cycle (GB/T2423.22-2002, Method Nb)	10 cycles from -55°C to +125°C. Tested after 24±2h at room temperature.	±5.0ppm
2	Low Temperature Storage (GB/T 2423.1-2001, Method Aa)	72h at -55°C±3°C constant temperature. Tested after 24±2h at room temperature.	±5.0ppm
3	High Temperature Storage(GB/T 2423.2-2001, Method Ba)	72h at +125°C±3°C constant temperature. Tested after 24±2h at room temperature.	±5.0ppm
4	Humidity (GB/T 2423.3-2006, Method Cab)	96h at +40 °C ± 3 °C, with 90± 3% RH. Tested after 24±2h at room temperature.	±5.0ppm
5	Vibration (GB/T 2423.10-1995, Method Fc)	Apply 0.75mm vibration at frequency 10～500 Hz, for 2h. 10 cycles in each direction of 3 axis, test after 1h.	±5.0ppm
6	Shock (GB/T 2423.5-1995,Method Ea)	Peak 1000m/s^2, with 6ms half sine wave, 3.7m/s, in 3 perpendicular axis, 3 cycles /direction, test after 1h.	±5.0ppm
7	Drop (GB/T 2423.8-1995, M. Ed)	Free drop onto wooden plate from 1.0 m height for 3times.	±5.0ppm
8	Solderability (GB/T2423.28-2005, Method Tc)	Dip into 245 ± 5℃ solder bath for 2 ± 0.5 seconds. Inspection under 8-12X magnifier.	>95% cover.
9	Terminal Strength (JIS-C-6429 Method 1 & 2)	Mount on a glass-epoxy board (100x50x1.6mm), then bend to 2mm displacement (velocity 1mm/sec) and keep for 5 seconds. or pulling force 0.5 kg for at least 60seconds	No damage
10	Resistance to Solder Heat (GB/T 2423.28-2005,Test Tb Meth. 1B)	Reflow at Preheat to 150°C±5°C for 60 to 120sec,and peak 265°C±5°C for 10s±3sec, Tested after 24±2h at room temp.	±5.0ppm

6. ENVIRONMENTAL COMPLIANCE INFORMATION

		Compliance information
1	RoHS	This product is fully RoHS compliant, 6/6 compliant per DIRECTIVE 2011/65/EU. The product is considered LEAD-FREE, Pb contamination guarantied <100ppm.
2	RoHS 2	This product is RoHS compliant per DIRECTIVE 2015/863 (also called RoHS10). In regards of RoHS 2, CE marking directive for finished products, we can provide RoHS test reports and MDS to show compliance, but since our product is not a final application we have no CE mark.
3	Halogen-Free	This product is compliant to IEC 61249-2-21:2003 (Br<800ppm / Cl<800ppm).
4	REACH (SVHC)	This product does not contain substances (SVHC) listed by REACH, we continuously monitor updates of the list of SVHC's
5	PFOS / PFOA Free	This product is free of any PFOS / PFOA.
6	Electrostatic Discharge (ESD) sensitivity	This product is not ESD sensitive and does therefore not require precautions for handling and storage. Follow JEITA EIAJ ED-4701 or JSD22 or ANSI-ESD-S20-20 or IEC 61000-4-2.
7	Moisture Sensitivity	This product is hermetically sealed and does NOT fall under the classification of moisture sensitivity per J-STD-020C (Standard is for non-hermetically sealed components). If required we suggest to use LEVEL 1

7. RECOMMENDED SOLDERING INFORMATION

RECOMMENDED REFLOW SOLDER PROFILE – PEAK TEMPERATURE UP TO +260°C

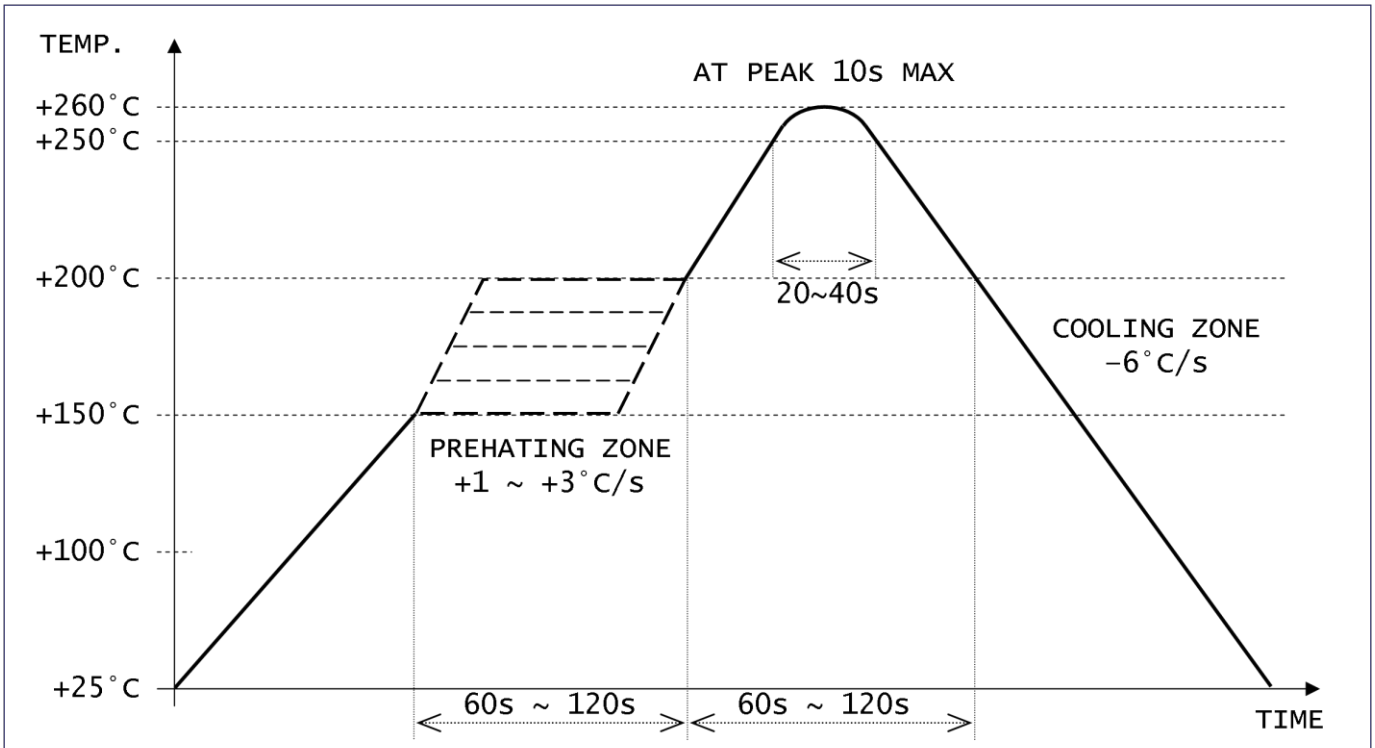

- Preheating at 150~180°C recommended.
- Peak temperature shall kept within ±5°C.
- For other procedures refer to IEC 60068-2-20.

MANUAL SOLDERING USING SOLDER IRON:

- Maintain solder bit temperature at +350±10°C.
- Application time shall be kept 3±1s or lesser.

8. PACKAGING

Carrier

	Parameter	STANDARD PACKAGING	ALTERNATE PACKAGING
1	A0	1.8±0.05	
2	B0	2.3±0.05	
3	K0	0.65±0.05	
4	B1	2.8±0.1	
5	P0	4.0±0.1	
6	P1	4.0±0.1	
7	T	0.25±0.05	
8	W	8.0±0.2	

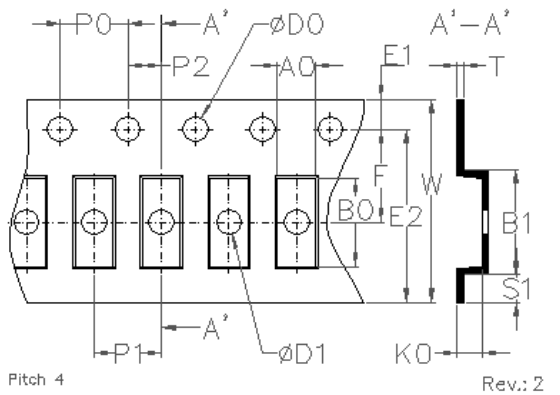

Note 1: All dimensions in [mm].
Note 2: All dimensions not specified or not being shown follow EIA-481 standard.

Reel

QTY per reel: 3,000pcs MAX

	Parameter	STANDARD PACKAGING	ALTERNATE PACKAGING
9	A	$178^{+0}_{-1.5}$	
10	B	2.0±0.5	
11	ØC	13.2±0.2	
12	ØD	21±0.8	
13	N	60.2±0.5	
14	W1	$8.0^{+1.0}_{-0}$	
15	W2	$11.4^{+2.0}_{-0}$	

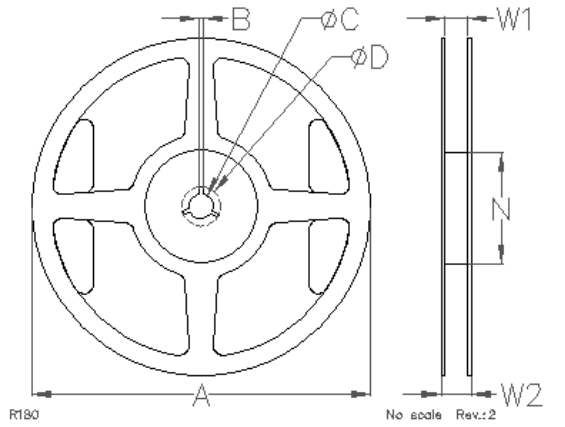

Note 1: All dimensions in [mm]. Dimension W1 is measured near the Hub (N).
Note 2: All dimensions not specified or not being shown follow EIA-481 standard.

Unreeling information

	Product's orientation in carrier tape
16	This product is a non-polarized component and does not require a certain orientation. This product can be used in reverse orientation and has therefore no pin identification and no specific orientation in the carrier.