N-Channel MOSFET

Primary characteristics			
Symbol	**Parameter**	**Value**	**Unit**
I_D	Continuous drain current (@T_C=25°C)	8	A
V_{DS}	Drain source voltage	650	V
R_{DSON}-typ(@V_{GS}=10V)	Static drain-source on-resistance	<1.3 Typ. 0.95	Ω

Features

- **TO-252 (D-PAK)** case for easy automatic insertion
- Pb-free and **RoHS** compliant
- Low gate charge minimize switching loss
- Fast recovery body diode

Application

- Adaptor
- TV main power
- SMPS power supply
- LCD panel power

Case dimensions

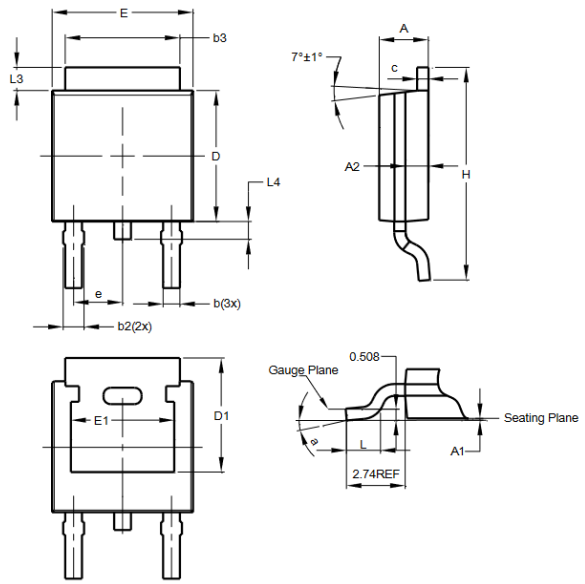

TO-252 (D-PAK)

	A	A1	A2	b	b2	b3	c	D	D1	e	E
TYP	2.29	0.08	1.07	0.783	0.95	5.33	0.531	6.1	-	2.286 BSC	6.58
MIN	2.19	0	0.97	0.64	0.76	5.21	0.45	6.0	5.21		6.45
MAX	2.39	0.13	1.17	0.88	1.14	5.5	0.58	6.2	-		6.7

	E1	H	L	L3	L4	a	
TYP	9.91	9.91	1.59	1.08	0.83	-	All measurements in mm
MIN	9.40	9.4	1.4	0.88	0.64	0°	
MAX	10.41	10.41	1.78	1.27	1.02	10°	

Maximum and thermal ratings (T_C = 25°C unless otherwise specified)			
Characteristics	**Symbol**	**Value**	**Unit**
Drain-source voltage [1]	V_{DSS}	650	V
Gate-source voltage	V_{GSS}	±30	V
Continuous drain current @T_C=25°C	I_D	8	A
Continuous drain current @T_C=100°C	I_D	See: Max. drain current vs case temperature	A
Pulsed drain current @V_{GS}=10V [2]	I_{DM}	See: Maximum peak current capability	A
Single pulse avalanche energy	E_{AS}	450	mJ
Peak diode recovery dv/dt [3]	dv/dt	5.0	V/ns
Power Dissipation @T_C=25°C Derating factor above 25°C	P_D	120 0.96	W W/°C
Operating junction temperature range	T_J, T_{STG}	-55 ~ 150	°C
Maximum temperature for soldering Leads at 0.063in (1.6mm) from case for 10s, package body for 10s	T_L T_{PAK}	300 260	°C
Thermal resistance junction-ambient	$R_{\theta JA}$	75	°C/W
Thermal resistance junction-case	$R_{\theta JC}$	1.04	°C/W

Electrical characteristics (T_C = 25°C unless otherwise specified)						
Characteristics	**Test condition**	**Symbol**	**Value**			**Unit**
			Min.	**Typ.**	**Max.**	
OFF characteristics						
Drain-to-source breakdown voltage	V_{GS}=0V, I_D=250μA	BV_{DSS}	650	-	-	V
Drain-to-source leakage current	V_{DS}=650V, V_{GS}=0V	I_{DSS}	-	-	1	μA
	V_{DS}=520V, V_{GS}=0V, T_J=125°C		-	-	100	
Gate-to-source leakage current	V_{GS}=+30V, V_{DS}=0V	I_{GSS}	-	-	100	nA
	V_{GS}=-30V, V_{DS}=0V		-	-	-100	
ON characteristics						
Static drain-to-source on-resistance [4]	V_{GS}=10V, I_D=4.0A	$R_{DS(ON)}$	-	0.95	1.3	Ω
Gate threshold voltage	V_{DS}=V_{GS}, I_D=250μA	$V_{GS(TH)}$	2.0	-	4.0	V
Forward transconductance [4]	V_{DS}=20V, I_D=8.0A	gfs	-	10	-	S
Dynamic characteristics						
Input capacitance	V_{GS}=0V, V_{DS}=25V, f=1.0MHz	C_{iss}	-	1240	-	pF
Reverse transfer capacitance		C_{rss}	-	14	-	
Output capacitance		C_{oss}	-	110	-	
Total gate charge	V_{DD}=325V, I_D=8.0A, V_{GS}=0 to 10V	Q_g	-	28	-	nC
Gate-to-source charge		Q_{gs}	-	5.6	-	
Gate-to-drain (Miller) charge		Q_{gd}	-	11.2	-	
Resistive switching characteristics						
Turn-on delay time	V_{DD}=325V, I_D=8.0A, V_{GS}=10V, R_G=9.1Ω	$t_{d(ON)}$	-	13	-	nS
Rise time		t_{rise}	-	15	-	
Turn-off delay time		$t_{d(OFF)}$	-	40	-	
Fall time		t_{fall}	-	22	-	
Source-drain body diode characteristics						
Continuous source current [4]	Integral PN-diode in MOSFET	I_{SD}	-	-	8	A
Pulsed source current [4]		I_{SM}	-	-	32	
Diode forward voltage	I_S=8.0A, V_{GS}=0V	V_{SD}	-	-	1.5	V
Reverse recovery time	V_{GS}=0V, I_F=8.0A, d_{IF}/dt=100A/μs	t_{rr}	-	555	-	ns
Reverse recovery charge		Q_{rr}	-	3.4	-	μC

1) T_J: 25°C ~ 150°C
2) Repetitive rating; pulse width limited by maximum junction temperature
3) I_{SD}=20A di/dt < 100 A/μs, V_{DD} < BV_{DSS}, T_J=150°C
4) Pulse width ≤ 380μs; duty cycle ≤ 2%

Maximum effective thermal impedance, junction-to-case

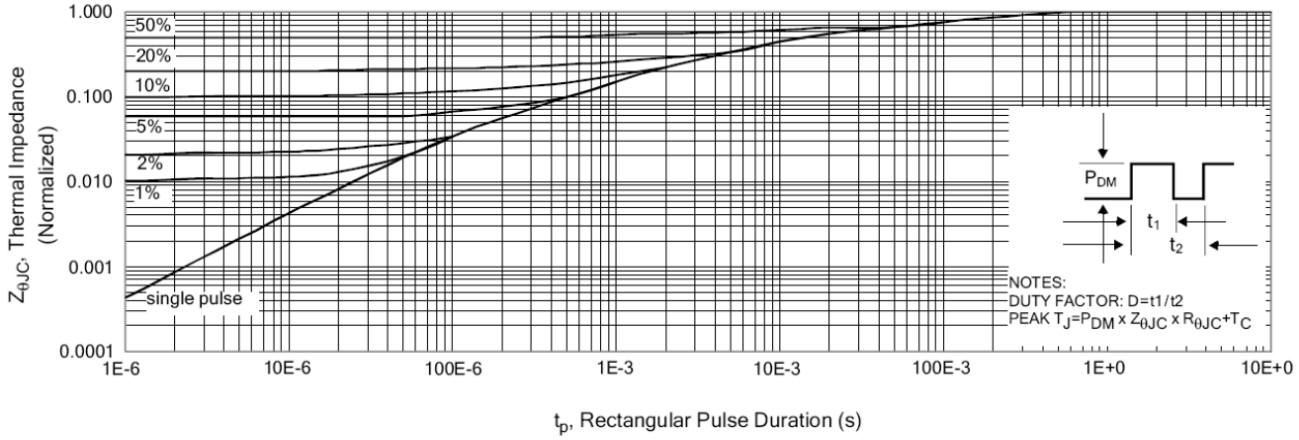

Maximum power dissipation vs case temperature

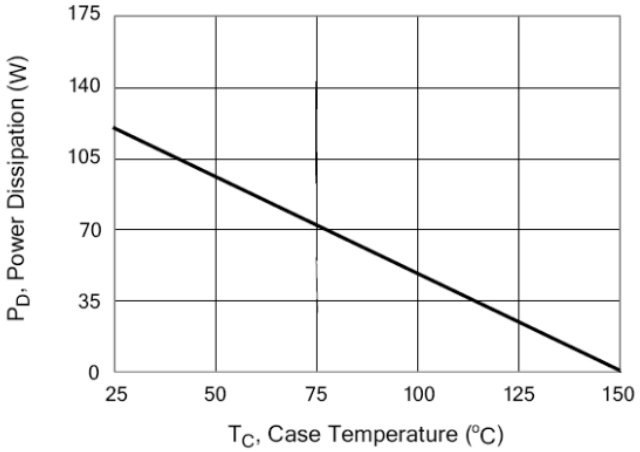

Maximum continuous drain current vs case temperature

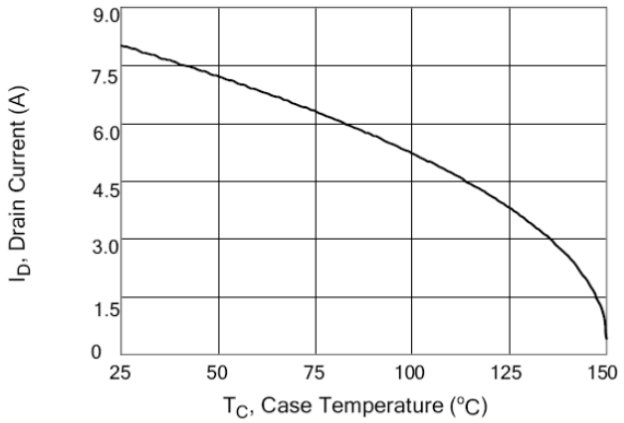

Typical output characteristics

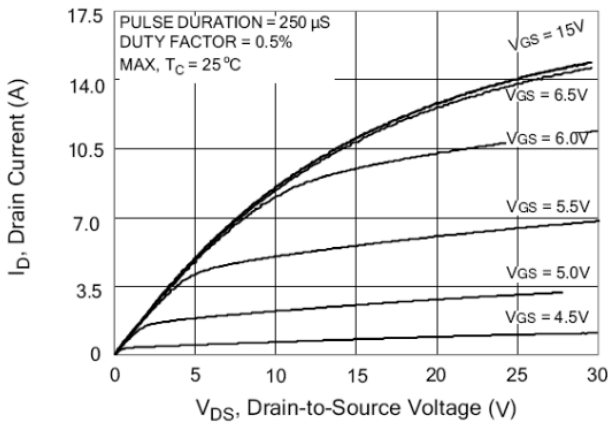

Typical drain-to-source ON resistance vs gate voltage and drain current

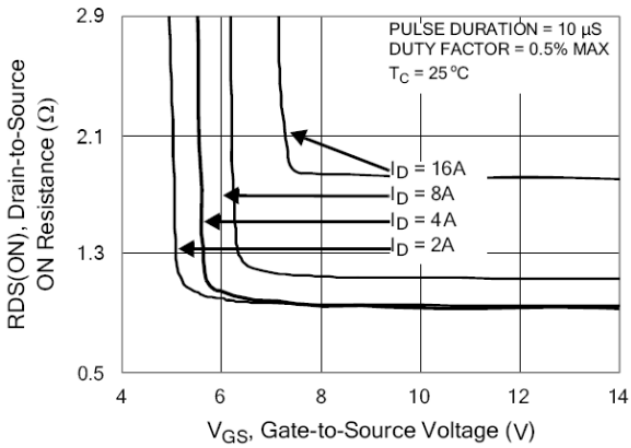

Maximum peak current capability

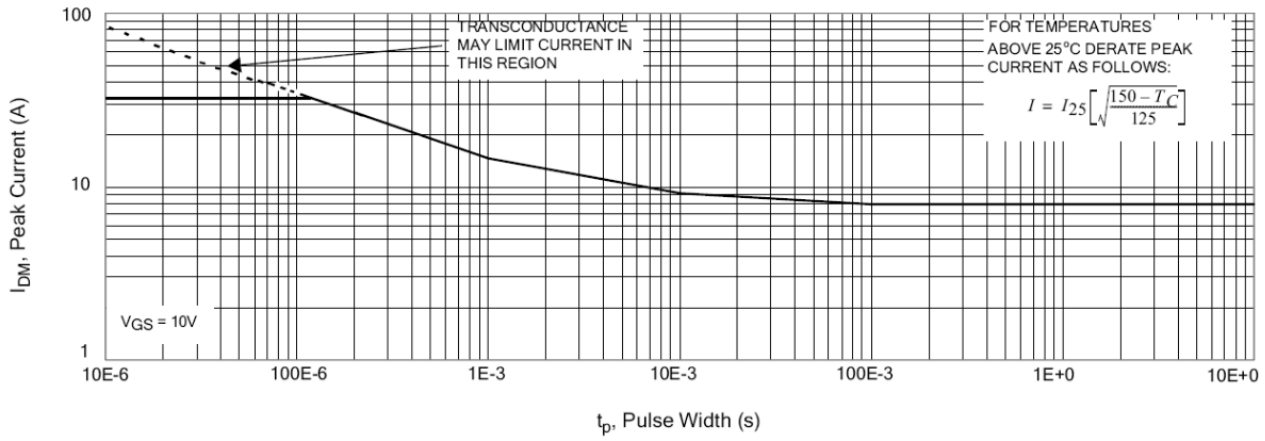

Typical transfer characteristics

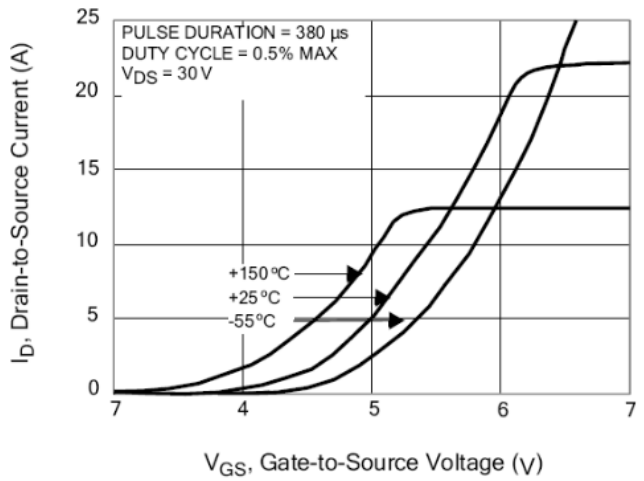

Unclamped inductive switching capability

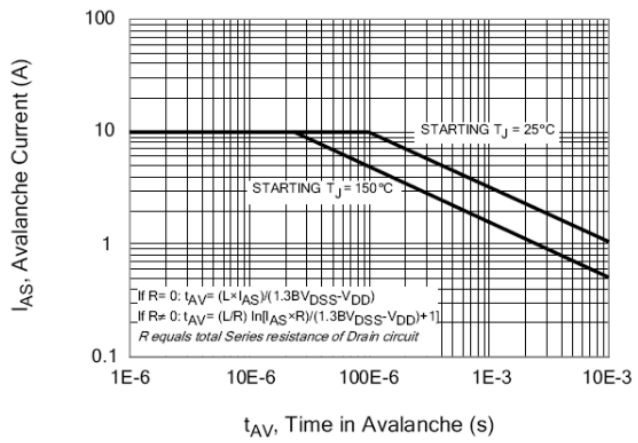

Typical drain-to-source ON resistance vs drain current

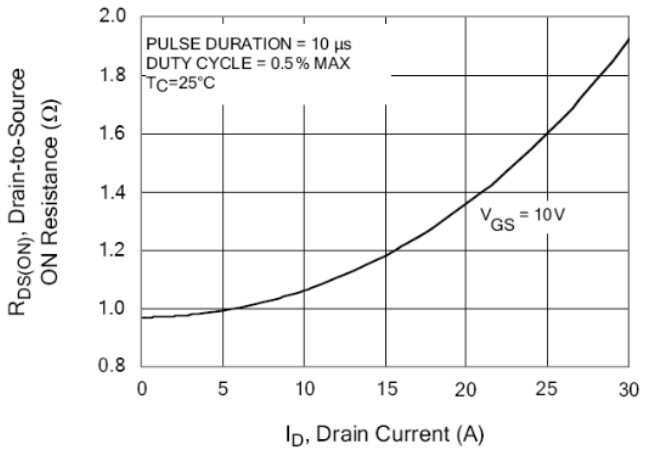

Typical drain-to-source ON resistance vs junction temperature

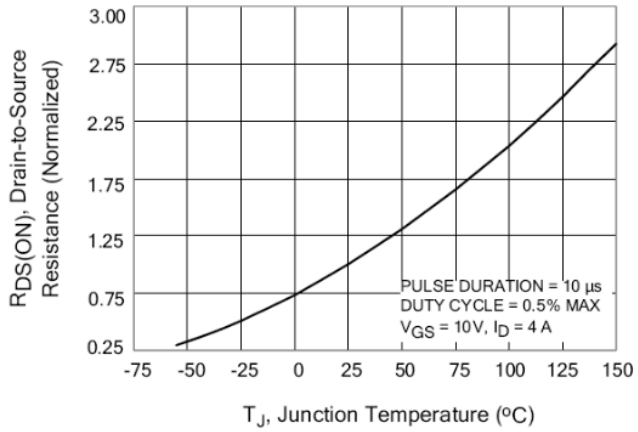

Typical breakdown voltage vs junction temperature

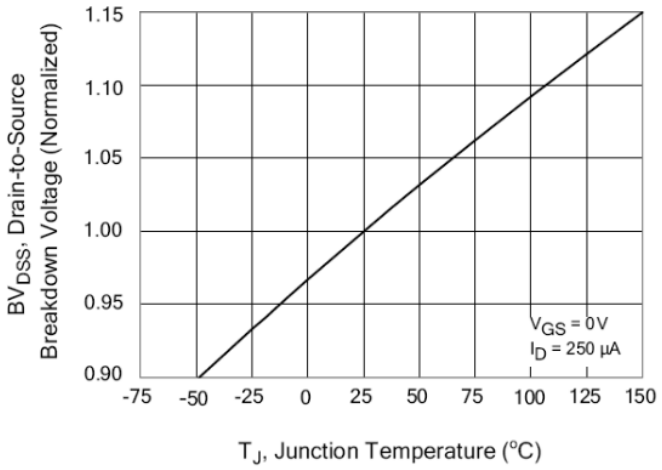

Typical threshold voltage vs junction temperature

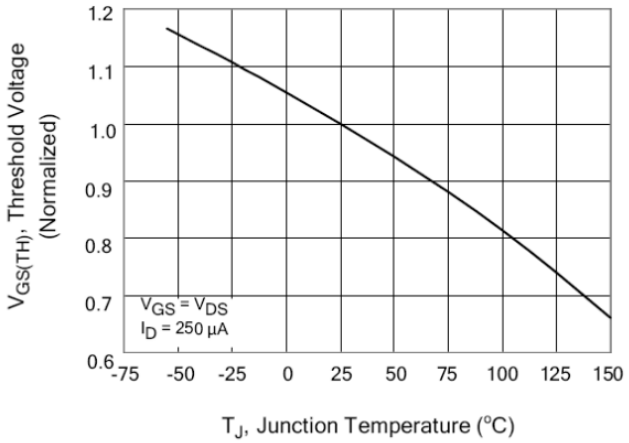

Maximum forward bias safe operating area

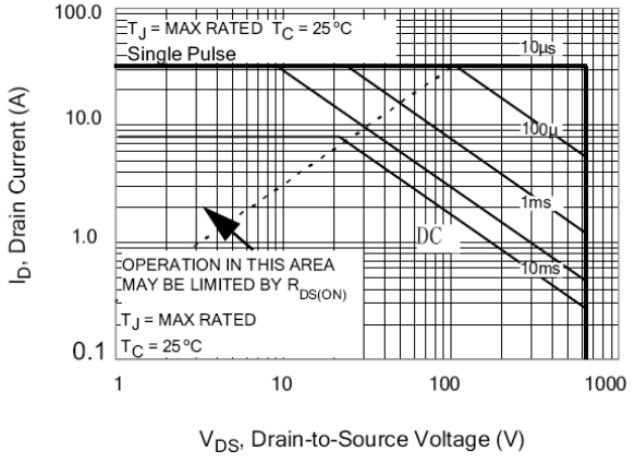

Typical capacitance vs drain-to-source voltage

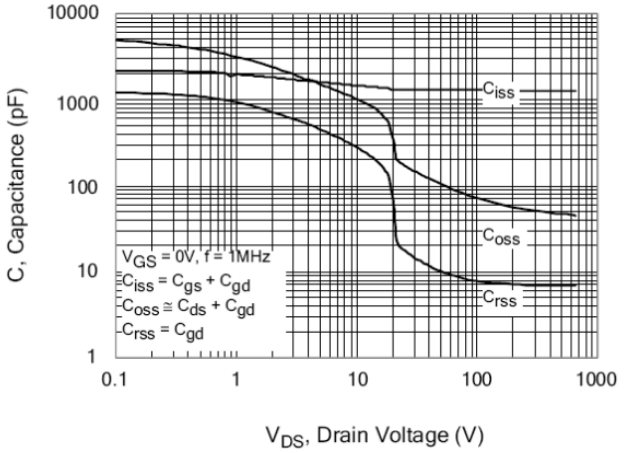

Typical gate charge vs gate-to-source voltage

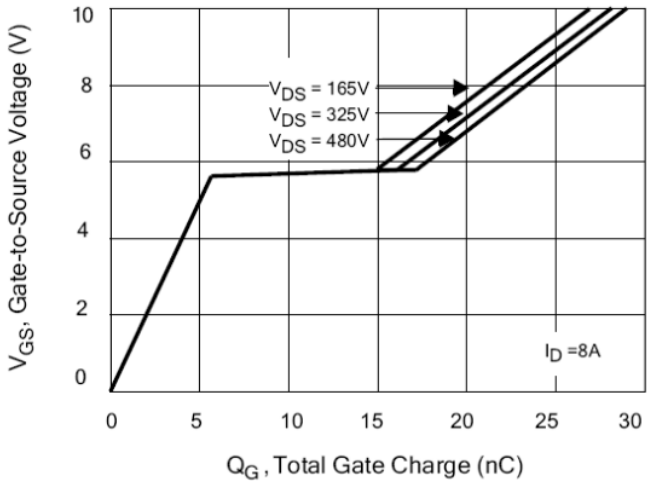

Typical body diode transfer characteristics

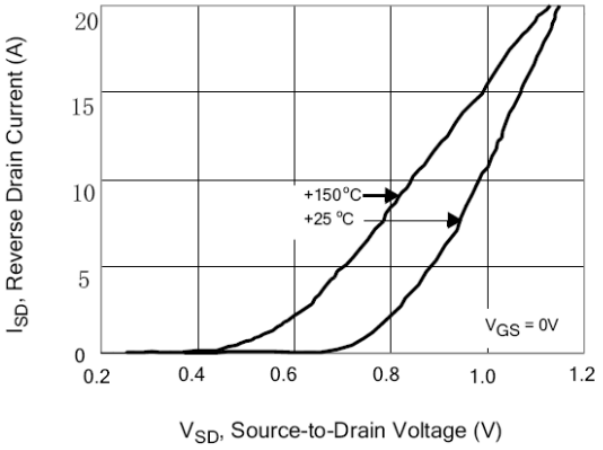

Peak diode recovery dv/dt test circuit

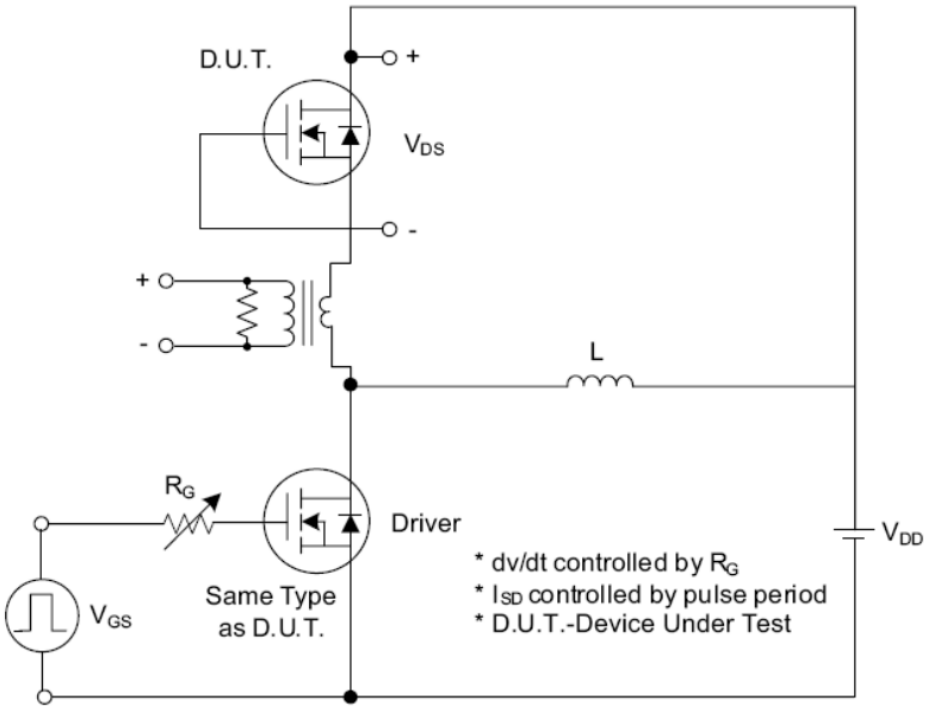

Peak diode recovery dv/dt waveforms

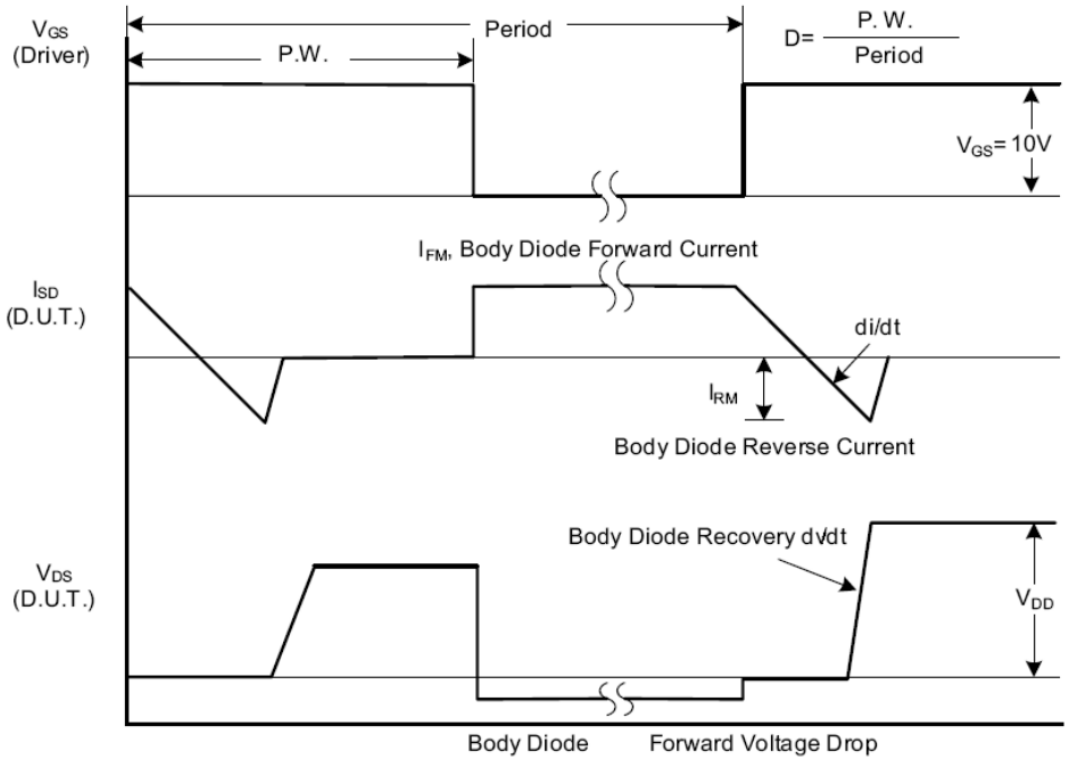

Switching test circuit	Switching waveforms
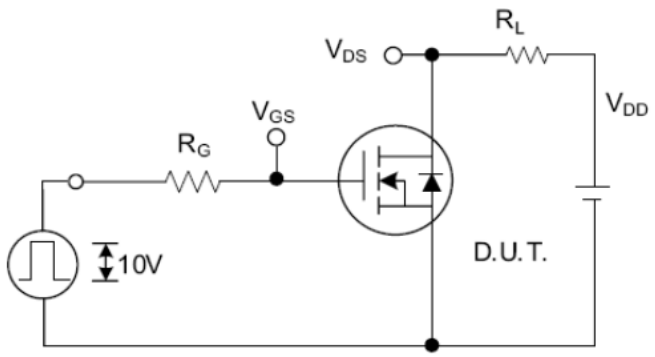	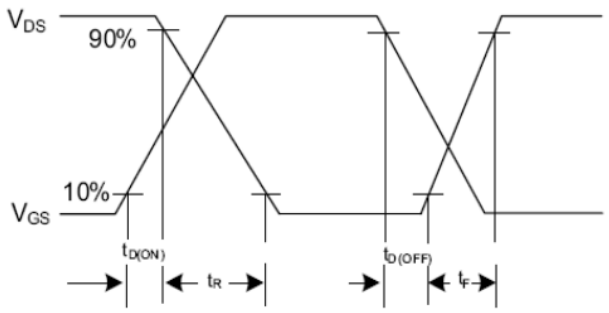
Gate charge test circuit	**Gate charge waveform**
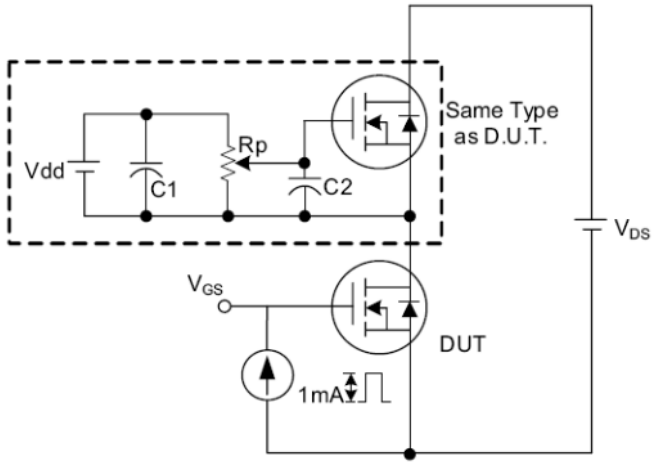	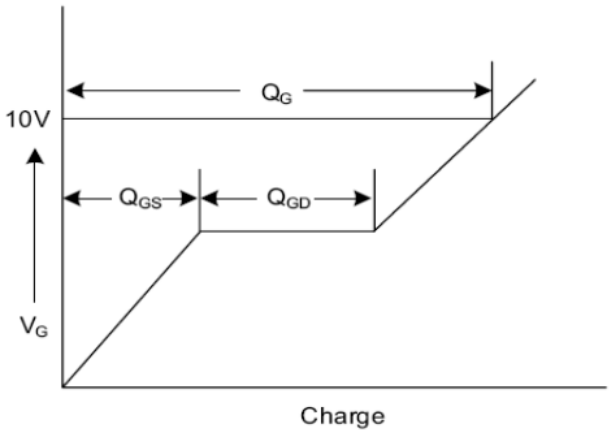
Unclamped inductive switching test circuit	**Unclamped inductive switching waveforms**
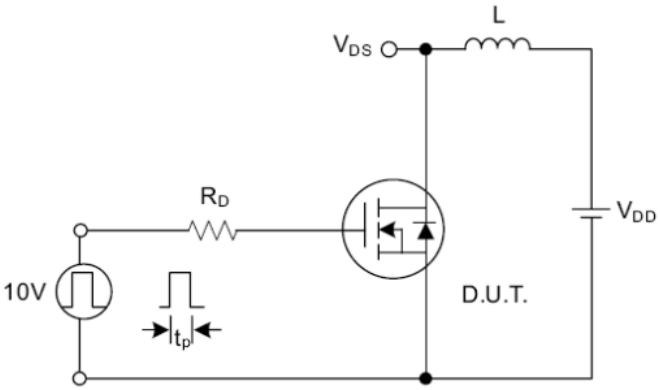	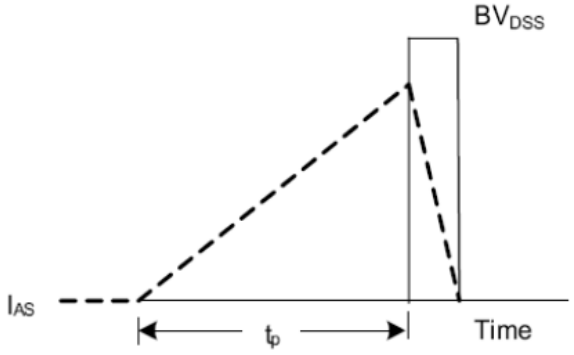

Ordering information			
Part Number	**Package**	**Shipping Quantity**	**Dimensions**
AKS08N65B	TO-252 (D-PAK)	**2500 pcs / reel**	---

Suggested soldering pad layout

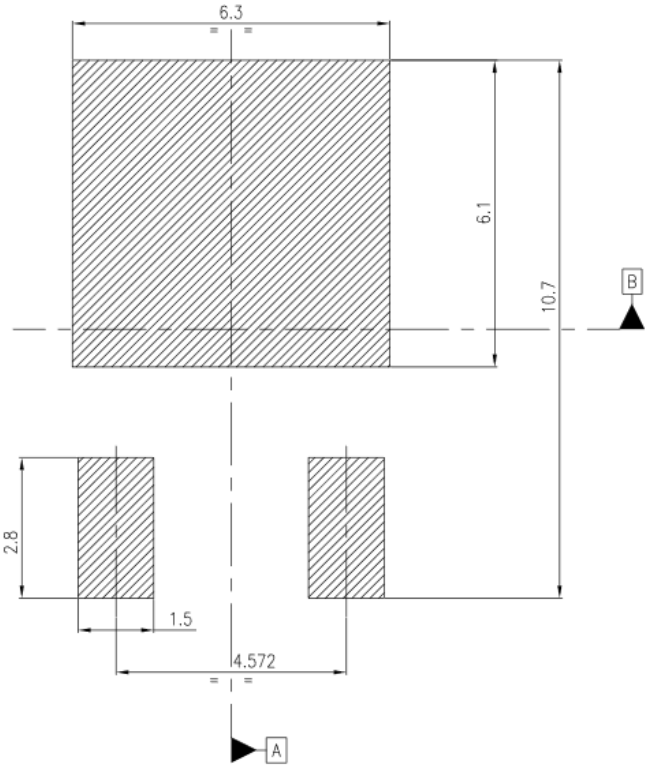

TO-252 (D-PAK)

Disclaimer

Akyga semi reserves the right to make changes without notice to any product specification herein, to make corrections, modifications, enhancements or other changes. Akyga semi or anyone on its behalf assumes no responsibility or liability for any errors or inaccuracies. Data sheet specifications and its information contained are intended to provide a product description only. "Typical" parameters which may be included on Akyga semi data sheets and/ or specifications can and do vary in different applications and actual performance may vary over time. Akyga semi does not assume any liability arising out of the application or use of any product or circuit. Akyga semi products are not designed, intended or authorized for use in medical, life-saving implant or other applications intended for life-sustaining or other related applications where a failure or malfunction of component or circuitry may directly or indirectly cause injury or threaten a life without expressed written approval of Akyga semi. Customers using or selling Akyga semi components for use in such applications do so at their own risk and shall agree to fully indemnify Akyga semi and its subsidiaries harmless against all claims, damages and expenditures.