AT5218

300mA Ultra-Low Quiescent Current, High PSRR LDO with Fast Enable Function

FEATURES

- Ultra-Low Quiescent Current : **0.3μA**(Typ.)
- Wide operating voltage range : 2.0 V to 7 V
- Maximum Output Current: 300mA
- Output Voltage Range: 1.0V~3.3V
- High Output Accuracy: ±1.5% (±1% optional)
- Low Dropout Voltage : 220mV@200mA /3.3V
- High PSRR: 70AdB@1KHz
- Low Temperature Coefficient
- Output Only 1uF Capacitor Required
- Thermal Shut Down(TSD), Short Circuit Protection(SCP), Over Current Protection(OCP)
- Can be connected down to 1uF output capacitor
- Fast Discharge Function
- Available in μDFN1x1-4L、SOT23 、SOT25、 packages

DESCRIPTION

The AT5218 series are ultra-low quiescent current, high speed and high precision low differential voltage linear regulator with enable pin and fast discharge shutdown.

Provide input over current protection, output short circuit protection, thermal shut down and other functions to protect the chip from damage under abnormal working conditions. Output voltage has 3.3V, 3.0V, 2.8V, 2.5V, 1.8V, 1.5V, 1.2V and 1.0V are optional.

The AT5218 is available in μDFN1x1-4L、SOT23 、SOT25 packages.

APPLICATION

- Radio Communication Equipment
- Battery powered products
- Reference voltage source
- Other low voltage regulators

ORDER INFORMATION

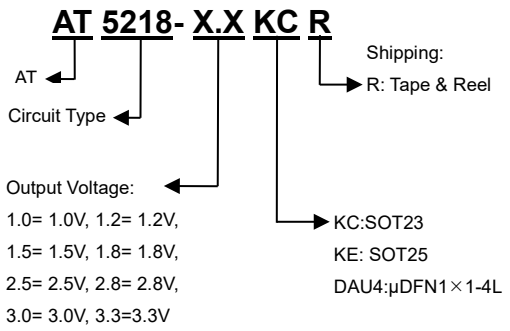

PIN CONFIGURATIONS (TOP VIEW)

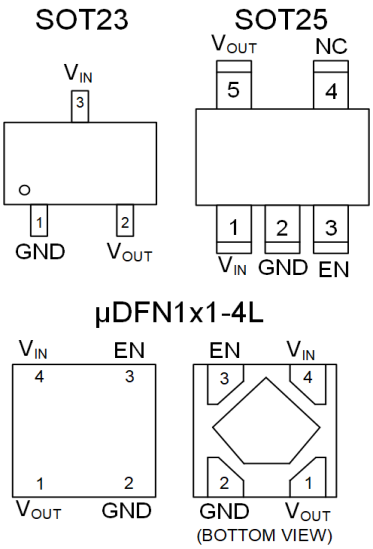

RoHS Compliant and Halogen Free

PIN DESCRIPTIONS

Pin Name	Pin Description
V_{IN}	Input Pin
GND	Ground Pin
EN	Enable Pin , Active high.This pin must not be left floating.
NC	No Connection
V_{OUT}	Output Pin.

TYPICAL APPLICATION CIRCUITS

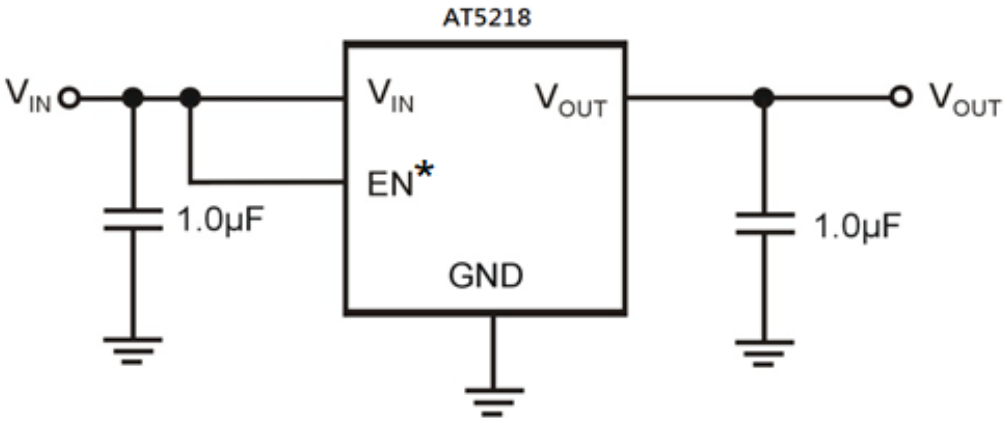

*EN pin must not be left floating.

BLOCK DIAGRAM

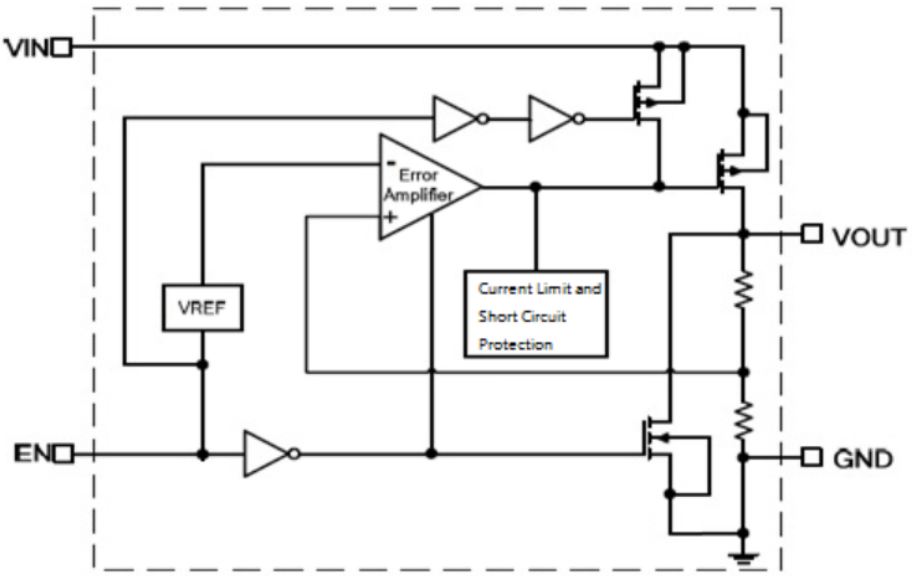

ABSOLUTE MAXIMUM RATINGS(Note 1)

Parameter		Symbol	Max Value	Unit
Input Voltage		V_{IN}	-0.3 to 9.0	V
Output Voltage		V_{OUT}	-0.3 to V_{IN}+0.3	V
Output Maximum Current		I_O	450	mA
Maximum Junction Temperature		T_J	125	°C
Storage Temperature Range		T_{STG}	-65 to +150	°C
Lead Temperature(Soldering) 5 Sec.		T_{LEAD}	260	°C
Power Dissipation P_D @ T_A=25°C (Note 2)	SOT23	P_D	280	mW
	SOT25		300	
	μDFN1x1-4L		400	
Thermal Resistance Junction to Ambient	SOT23	θ_{JA}	357	°C/W
	SOT25		357	
	μDFN1x1-4L		250	
Thermal Resistance Junction to Case	SOT23	θ_{JC}	106.6	°C/W
	SOT25		106.6	
	μDFN1x1-4L		23	
ESD Rating (Human Body Model) (Note 3)		V_{ESD}	2	kV

RECOMMENDED OPERATING CONDITIONS (Note 4)

Parameter	Symbol	Operation Conditions	Unit
Supply Input Voltage	V_{IN}	7	V
Enable Input Voltage	V_{EN}	-0.3 to V_{IN}	V
Operating Junction Temperature Range	T_J	-40 to +125	°C
Operating Ambient Temperature Range	T_{OPA}	-40 to +85	°C

Note 1: Stresses listed as the above "Absolute Maximum Ratings" may cause permanent damage to the device. These are for stress ratings. Functional operation of the device at these or any other conditions beyond those indicated in the operational sections of the specifications is not implied. Exposure to absolute maximum rating conditions for extended periods may remain possibility to affect device reliability.

Note 2: Thermal Resistance is specified with the component mounted on a low effective thermal conductivity test board in free air at T_A=25°C.

Note 3: Devices are ESD sensitive. Handling precaution recommended.

Note 4: The device is not guaranteed to function outside its operating conditions.

ELECTRICAL CHARACTERISTICS

$V_{IN}=V_{OUT}$ +1V, V_{OUT} =3.3V,C_L=4.7μF,T_A=25°C,unless otherwise noted

Parameter	Symbol	Test Conditions	Min	Typ	Max	Unit
Input Voltage	V_{IN}		2.0	—	7.0	V
Output Voltage	V_{OUT}	$V_{IN}>V_{OUT}$+1V,I_{OUT}=1mA,	-1.5	—	+1.5	%
Quiescent Current	I_Q	$V_{EN=}V_{IN}$	—	0.3	0.9	μA
Shutdown Current	I_{SD}	V_{EN}=0V	—	—	0.1	μA
Maximum output Current	I_{OUT}	V_{IN}-V_{OUT}=0.5V	—	300	—	mA
Dropout Voltage	V_{DROP}	Vout=3.3V I_{OUT}=100mA, I_{OUT}=200mA, I_{OUT}=300mA	 — — —	 110 220 370	 160 250 400	mV
Linear adjustment rate	ΔV_{LINE}	V_{IN}=3.7V to 7V, I_{OUT}=1mA	—	0.1	0.15	%/V
Load Regulation	ΔV_{LOAD}	V_{IN}=V_{OUT}+1V, 1mA<I_{OUT}<300mA	—	20	30	mV
Current Limit	I_{LIM}	V_{IN}=5V	—	550	—	mA
Short Circuit Current	I_{SC}	RL=1Ω	—	—	90	mA
EN Pin Input Voltage “H”	V_{ENH}	V_{IN}=5.5V, I_{OUT}=1mA	1.2	—	—	V
EN Pin Input Voltage “L”	V_{ENL}	V_{IN}=5.5V, I_{OUT}=1mA	—	—	0.4	V
Enable Current	I_{EN}	V_{EN}=1.2V	—	50	100	nA
Ripple Rejection	PSRR	I_{OUT}=100mA,f=217Hz	—	-68	—	dB
		I_{OUT}=100mA,f=1KHz	—	-70	—	
		I_{OUT}=100mA,f=10KHz	—	-60	—	
Output Noise	eNO	10Hz to 100 KHz, C_{OUT}=1μF	—	100	—	μV(rms)
Temperature Characteristics	T_C	I_{OUT}=30mA, T_A=0~70°C	—	±100	—	ppm/°C
Thermal Shutdown Temperature	T_{SD}		—	160	—	°C
Thermal Shutdown Hysteresis	HYS_{TSD}		—	20	—	°C

TYPICAL OPERATING CHARACTERISTICS

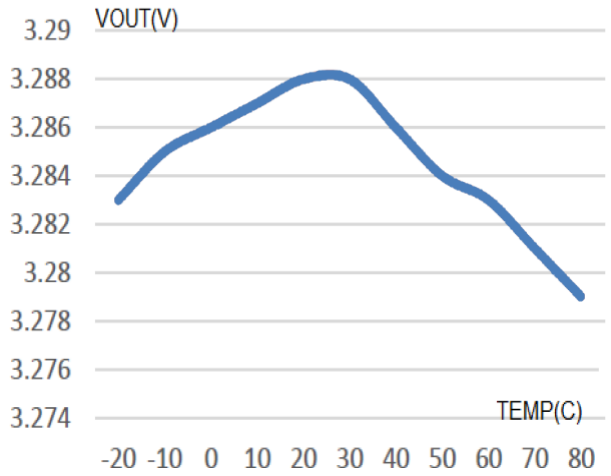

Fig.1 Output Voltage vs. Temperature

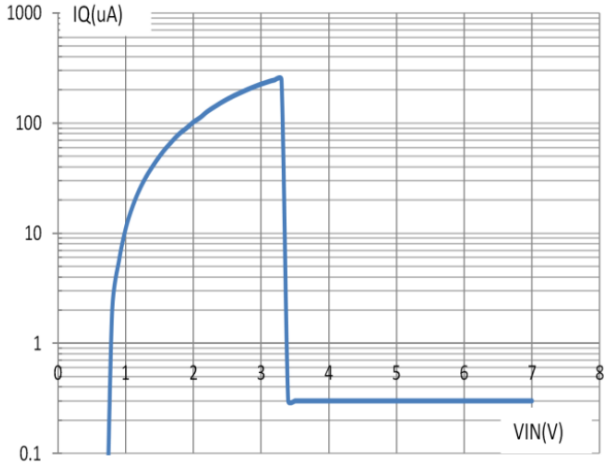

Fig.2 Quiescent Current vs. Input Voltage (3.3V)

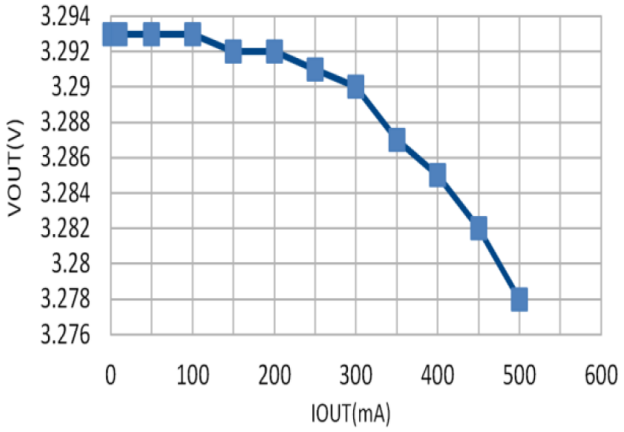

Fig.3 Output Voltage vs. Load Current

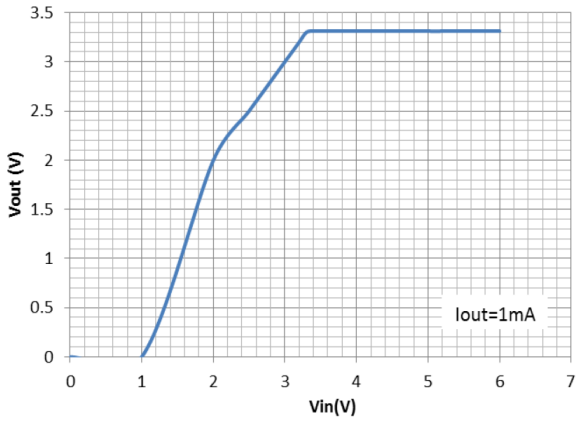

Fig.4 Input Voltage vs. Output Voltage (3.3V)

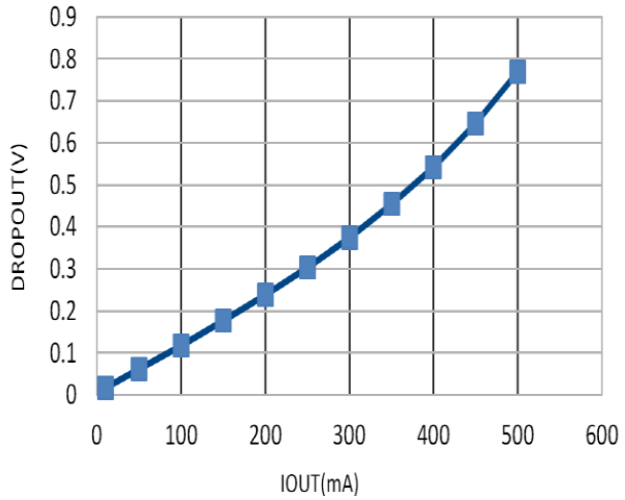

Fig.5 Output Voltage vs. Load Current

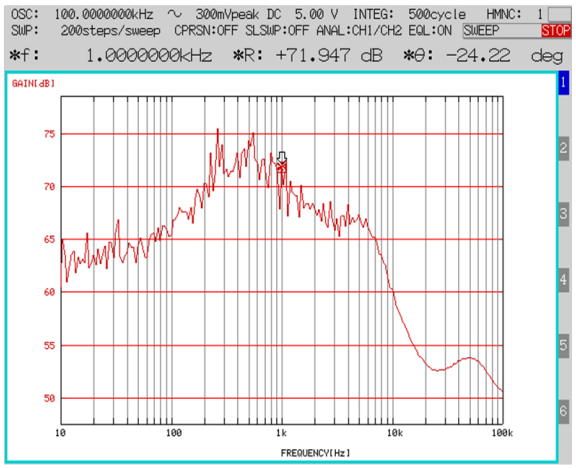

Fig.6 PSRR Vin=5V,Vout=3.3V,Iout=100mA

Cin=1uF,Cout=4.7uF

TYPICAL OPERATING CHARACTERISTICS

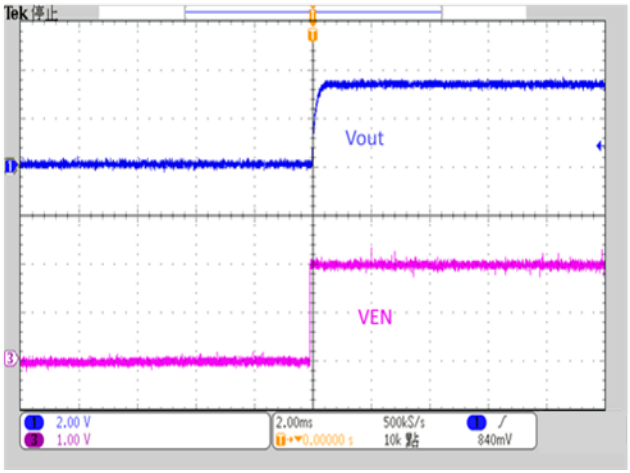

Fig.7 Start-Up(No Load)

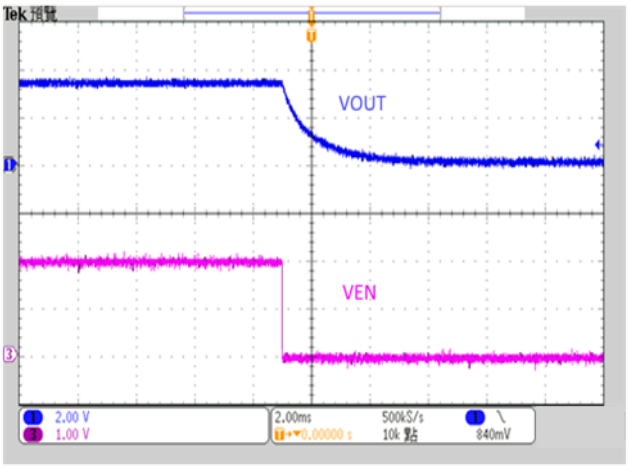

Fig.8 Shutdown(No Load)

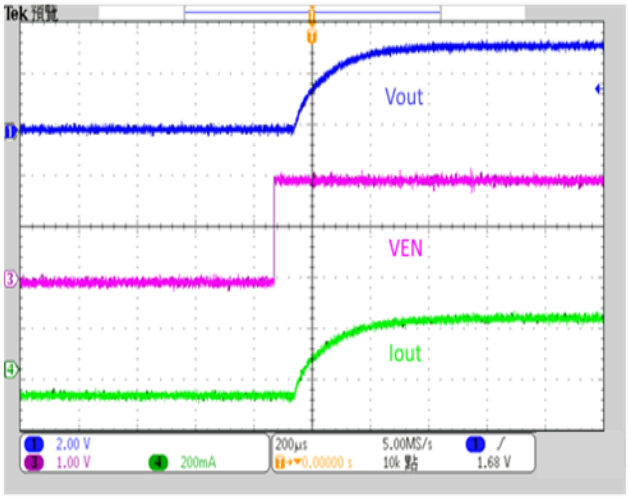

Fig.9 Start-Up(300mA Load)

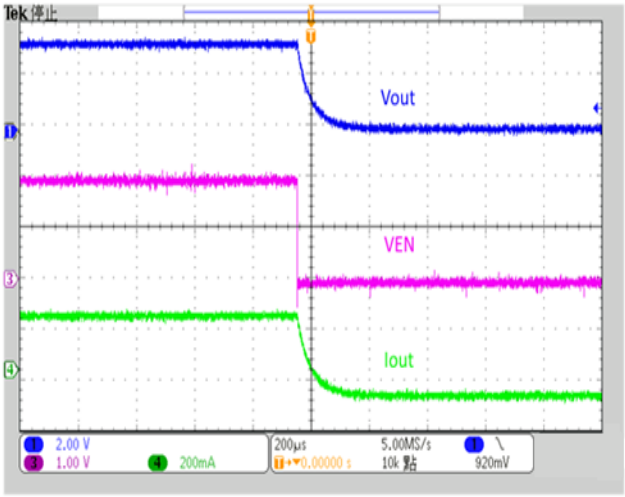

Fig.10 Shutdown(300mA Load)

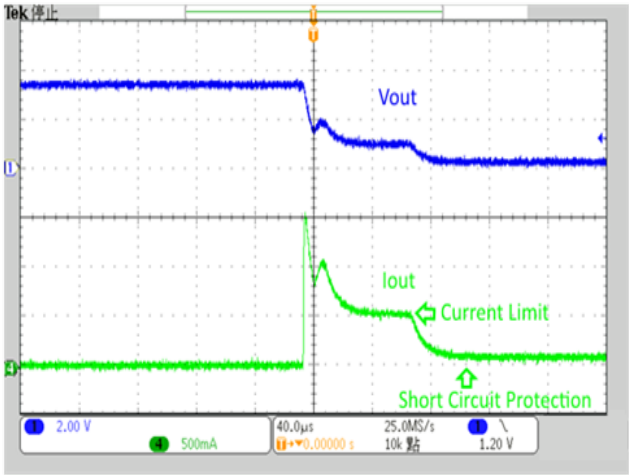

Fig.11 Short Circuit Response (1.5Ω Load)

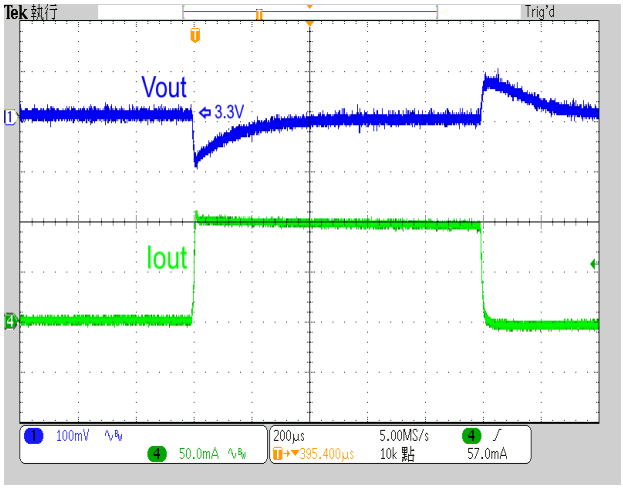

Fig.12 Load Transient Response (100mA Load)

TYPICAL OPERATING CHARACTERISTICS

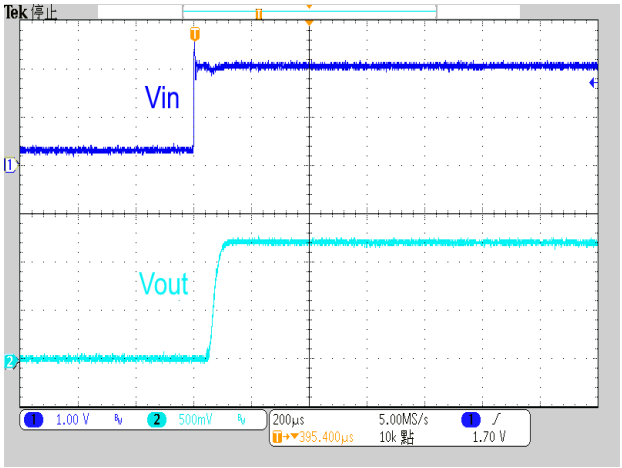

Fig.13 Soft Start Time V_{IN}=V_{EN} (1.2V 100mA)

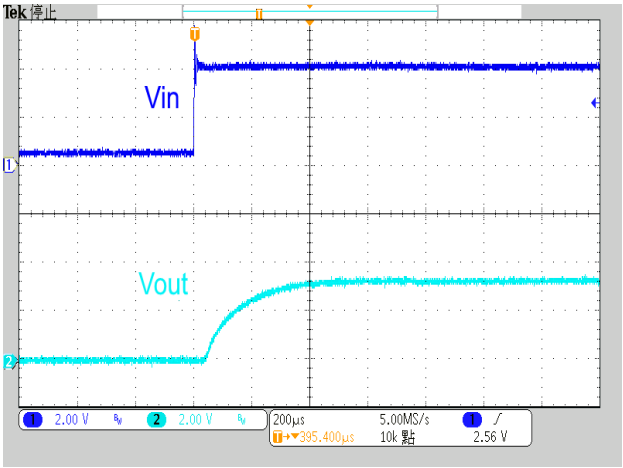

Fig.14 Soft Start Time V_{IN}=V_{EN} (3.3V 100mA)

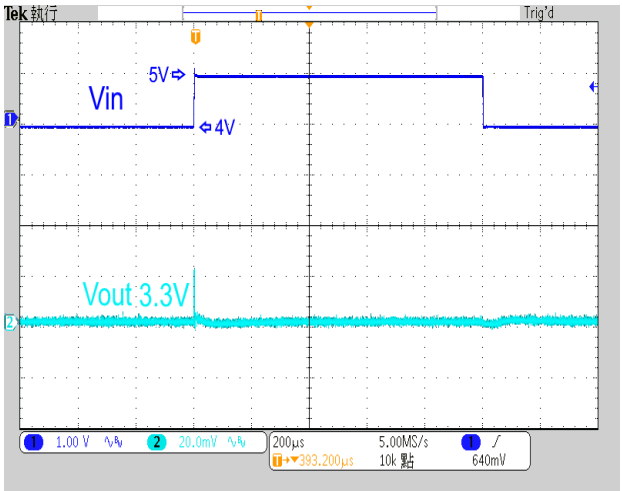

Fig.15 Input Voltage Transient Response (1mA)

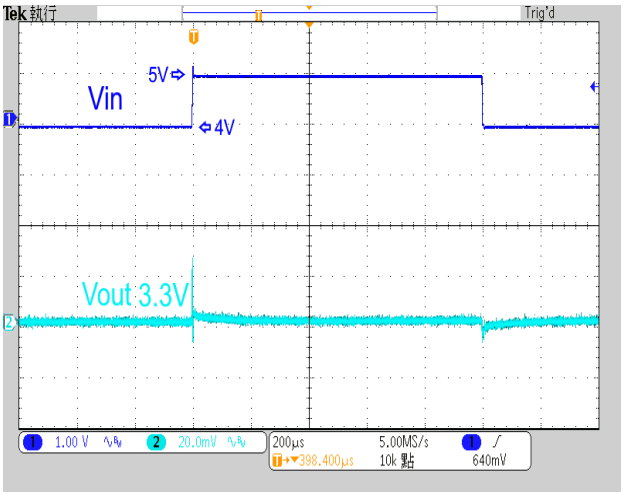

Fig.16 Input Voltage Transient Response (100mA)

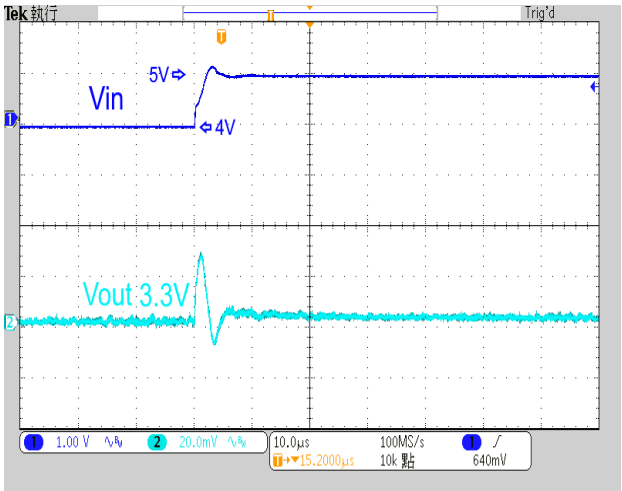

Fig.17 Rising Time (Zoom In Fig.14)

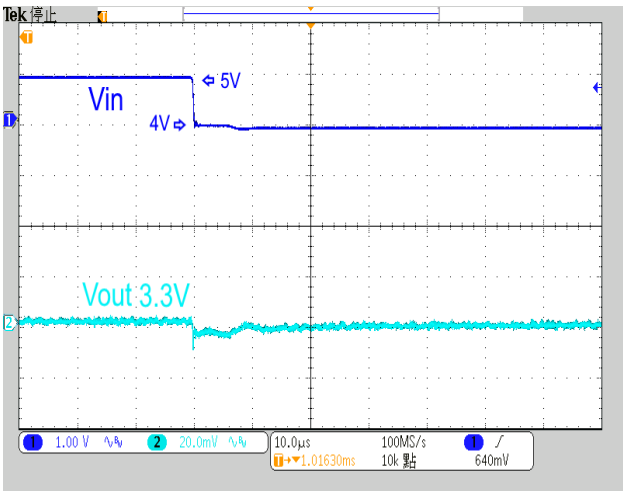

Fig.18 Falling Time (Zoom In Fig.14)

APPLICATION INFORMATION

The AT5218 is a ultra-low quiescent current, low dropout linear regulator. The following application section noted would help regulator operate properly.

Input Capacitor Considerations

It is suggested that a value of at least 1uF is chosen for the input capacitor. Capacitor need to be placed close to the regulator input pin. A ceramic type is recommended as they have better temperature coefficients and due to their lower ESR – Equivalent Series Resistance

Output Capacitor Considerations

The output capacitor plays an important role in keeping the output voltage stable. For ceramic types, an output capacitance value of at least 1μF should be chosen. For E-cap types, a capacitance value of at least 2.2μF should be chosen. The larger capacitance can improve noise, load-transient response, PSRR, and stability.

Effect of Potential Difference

Inside the linear regulator is a transistor between V_{IN} and V_{OUT} and the minimum potential difference to achieve stable transistor operation is called the dropout voltage. When the voltage difference falls below the dropout voltage the transistor cannot maintain stable operation and the output voltage would significantly decreases. In this way, for the linear regulator, the minimum dropout voltage is necessary to set to ensure stable operation at maximum output current. Input voltage must satisfy the equation $V_{IN}>=V_{OUT}+V_{drop.}$ Therefore, if input voltage is much higher than output voltage or output current small enough, this effect could be ignored.

Package & Maximum Output Current

The power dissipation in the LDO is determined by the voltage drop (V_{IN}-V_{OUT}) across the LDO multiplied by the current passing through the LDO (I_{OUT}), which can be calculated from the formula $P_D = (V_{IN} - V_{OUT}) * I_{OUT}$. Each type of package has different power dissipation. When the input and output voltages are determined, the maximum output current can be calculated according to the package form. $I_{OUT} \leqq P_{DMAX}/(V_{IN}-V_{OUT})$ According to the above formula, you can choose the most suitable package form.

PCB Layout Guide

The input and output capacitors should be placed close together and coplanar with the GND pin of the chip to avoid vias. In large load current applications, it is necessary to borrow large copper blocks to help dissipate heat.

Current Limit

The AT5218 includes a foldback current limiter. It monitors and controls the pass transistor's gate voltage, estimates the output current, and limits the output current under 550mA.

PACKAGE OUTLINE DIMENSIONS
SOT23

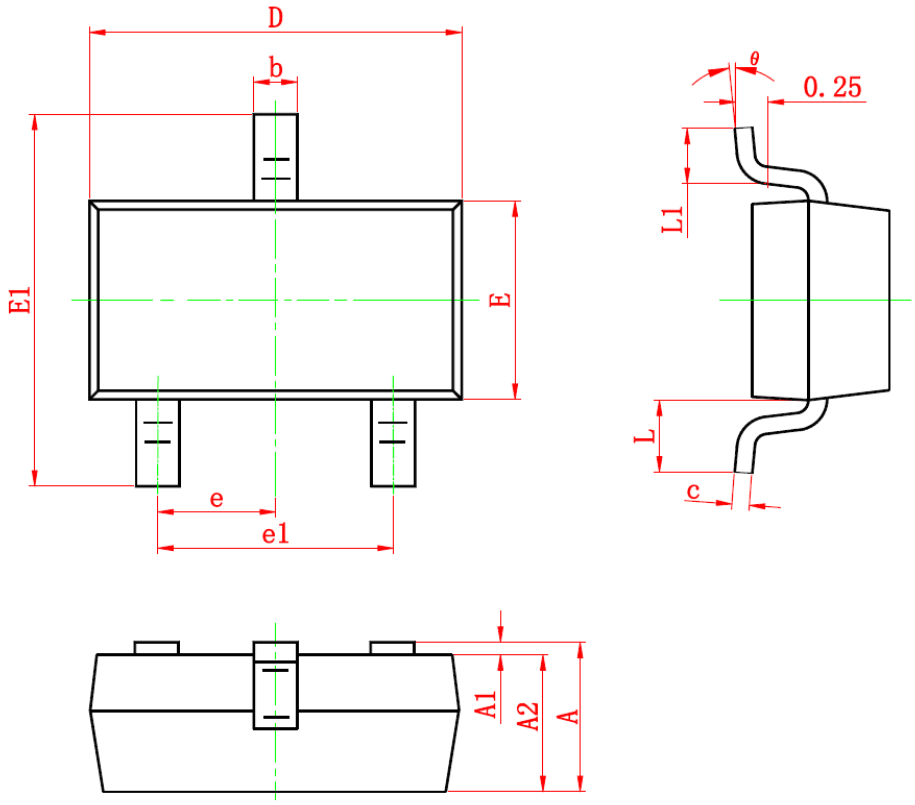

Symbol	Dimensions In Millimeters	
	Min	Max
A	0.900	1.150
A1	0.000	0.100
A2	0.900	1.050
b	0.300	0.500
c	0.080	0.150
D	2.800	3.000
E	1.200	1.400
E1	2.250	2.550
e	0.950 TYP	
e1	1.800	2.000
L	0.550 REF	
L1	0.300	0.500
θ	0°	8°

PACKAGE OUTLINE DIMENSIONS
SOT25

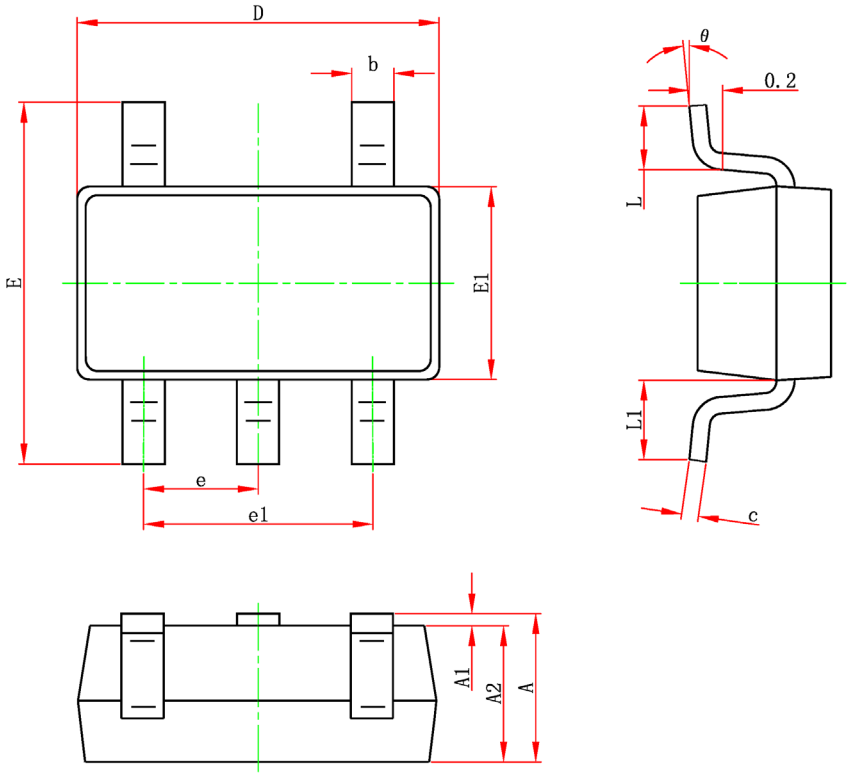

Symbol	Dimensions In Millimeters	
	Min.	Max.
A	1.050	1.250
A1	0.000	0.100
A2	1.050	1.150
b	0.300	0.500
c	0.100	0.200
D	2.820	3.020
E1	1.500	1.700
E	2.650	2.950
e	0.950(BSC)	
e1	1.800	2.000
L	0.300	0.600
L1	0.600REF.	
θ	0°	8°

PACKAGE OUTLINE DIMENSIONS
μDFN1×1- 4L

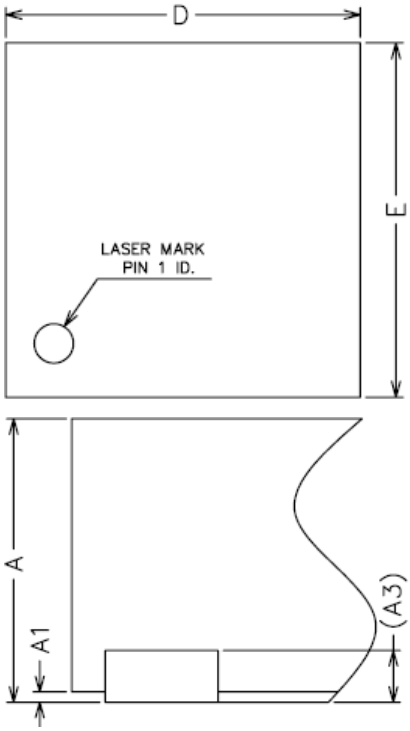

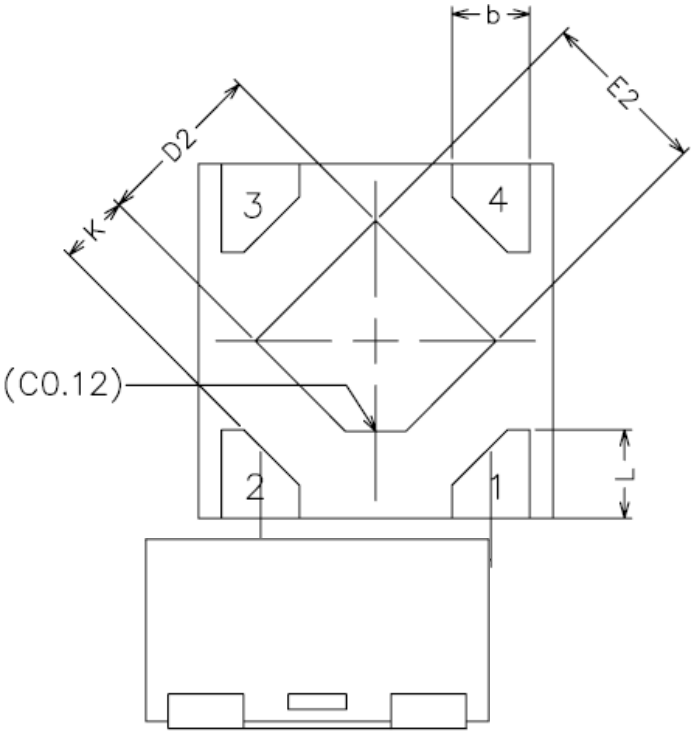

Symbol	Dimensions In Millimeters		
	Mix	Nom	Max
A	0.5	0.55	0.60
A1	0.00	0.02	0.05
A3	0.100REF		
b	0.17	0.22	0.27
D	0.95	1.00	1.05
E	0.95	1.00	1.05
D2	0.43	0.48	0.53
E2	0.43	0.48	0.53
L	0.20	0.25	0.30
e	0.60	0.65	0.70
K	0.15	—	—