SpecificationApprovalSheet

Model : 11.1V2.5Ah NCM battery
Description 3S battery pack
Customer : 015

Contents

1. Scope

This product specification describes the requirements for the rechargeable Lithium battery pack with protection circuit for detecting function of over-charge, over-discharge, over current etc. which be manufactured and supplied by Akyga Battery

2. Product Description

2.1 Cell type B18650CA cell with 2500mAh

3. Battery Pack Basic Characteristic

No.	Item	Specification	Notes
1	Cell Type	P18650CA	3.6V 2500MAH Rated @5C
2	Array Mode	3S	
3	Nominal Capacity	2500mAh at 23±2℃	Standard charge/discharge
4	Minimum Capacity	2450mAh	
5	Nominal Voltage	11.1V	
6	Energy	27.75Wh at 23±2℃	
7	AC Impedance	≤250mΩ	At 1kHz @100%SOC
8	Charging Voltage /current	12.6V/50mA	Charge with 12.6V till charge current is 50mA
9	Discharge End Voltage	9.0V	3.0V per cell
10	Standard Charging Current	500mA(0.2C)	Temperature: 23±2℃
11	Max. charge current	2500mA	Max.Continuous charge
12	Standard Discharging Current	500mA (0.2C)	Constant Current Discharge with 0.2C
13	Max. Discharge Current	10A	Max. Continuous Discharge（Temperature: 23±2℃）
14	Overcharge Protection Threshold	4.25V per Cell	Release condition4.15V/cell
15	Over Discharge Protection Voltage Threshold	2.75V per Cell	Release condition3.0V/cell

16	Over Temperature Protection Threshold	65±5℃	During Discharge Process
17	Over Temperature Protection Release Condition	55±5℃	During Discharge Process
18	Work Life	≥80%（500 cyclelife）	With 75% initial capacity
19	Operating Temperature	0℃～45℃	Charging Operating
		-20℃～60℃	Discharging Operating
20	Storage Characteristic	1 month	Temperature -20℃～65℃
		3 months	Temperature -20℃～65℃
		One year	Temperature -20℃～20℃
21	Relative Humidity for Storage	5%～95%RH	
22	Charge Retention and Capacity Recovery Characteristic	Charge Retention Rate≥85% and Capacity Recovery Rate≥ 90%.	Storage the battery for 28d at 25±2℃ after fully charge with standard charge method.
23	Discharge Capacity at Different Temperature after Standard fully Charging.		

Discharge Temperature	-10℃	0℃	23℃	60℃
Discharge Capacity (600mA)	≥50%	≥60%	100%	≥98%

4. Battery Mechanical Characteristics

No.	Item	Specification	Test Method and Condition
1	Vibration Test	No explosion, No leakage and No fire.	After standard charging, fixed the cell to vibration table and subjected to vibration cycling that the frequency is to be varied at the rate of 1Hz per minute between 10Hz an 55Hz, the excursion of the vibration is 1.6mm. The cell shall be vibrated for 30 minutes per axis of XYZ axes.
2	Drop Test	No explosion, No leakage and No fire.	After standard charging, the battery is to be dropped from a height of 1 meter twice onto concrete ground.
3	IP class	IP44	Keep the objects with a diameter or thickness greater than 1mm out from the battery; protection against liquids, preventing water splashing from all directions from entering the battery and causing damage.

5. Battery Safety Characteristics

No.	Item	Specification	Test Method and Condition
1	Short Circuit	No explosion, No fire and he Temperature of the surface of battery is lower than 150℃	After standard charging and put the battery into a fume hood, and connect the Negative terminal and Positive terminal directly with a Cu wire (the wire's resistance should be lower than 50mΩ). Record the surface temperature of battery during the test and stop the test when the temperature decreases to about 10℃ lower than the peak temperature during whole test. Note：this test is performed without PCM
2	Heating Test	No explosion，No fire	After standard charging and put the battery into oven convection or circulating air oven. The temperature of oven is to be raised with a rate of 5±2°C/min to a temperature of 130±2°C and last for 10 minutes.
3	Impact Test	No explosion，No fire	After standard charge，Place the battery on a flat surface. A 9.1 kg article is to be dropped from a height of 100cm onto the sample. The battery is allowed to sharp change.
4	Over Charge	No explosion，No fire	After standard charging and put the battery in fume hood. Add constant voltage & current3.9V 1C to the battery. Charging it until the battery reaches 20V, charging current decreases to almost 0A. Record the temperature curve of the battery and stop test when the battery temperature decreases to about 10℃ lower than the peak temperature during whole testing. This test is performed without PCM
5	Over discharge	No fire，No explosion and No leaking	After standard charging, the battery discharged to the cut-off voltage with aout 0.2C current，and then the battery shall be subjected to a short-circuit condition with a load of resistance about 60Ω for 24 hours.

6. Product Scheme and Characteristic

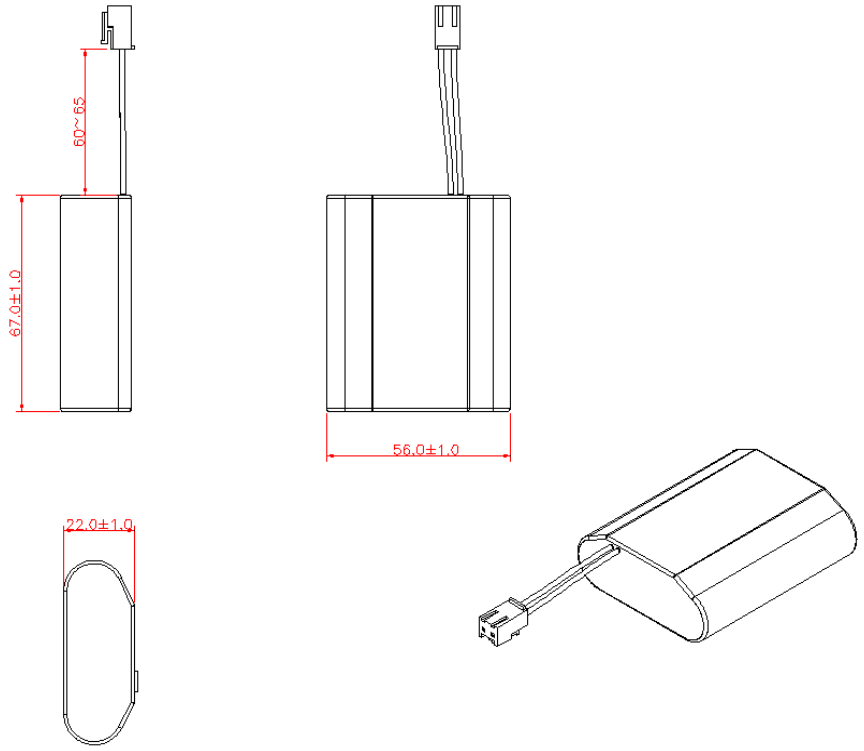

Note: the above is only a schematic diagram of our product, the actual product appearance has a little difference from this

No.	Item	Specification	Notes
1	Product Size：Length	67.0±1.0	
2	Product Size：Width	56.0±1.0	
3	Product Size：Thickness	22.0±1.0	
4	Output wire length	60～65mm	Wire 168～172mm 100～105
5	Type of output wire	UL1007AWG18#	Charge:UL1007AWG18# Discharge:UL10047AWG22#
6	Product Weight	Approximate:160g	
7	Connector type	without connector	only wires
8	Delivery Capacity	35%～75%SOC	

9. Storage Conditions

- When the battery to be long-term stored, charge the battery to about 60%SOC, store in dry an ventilated place, charge 1h for every 3 months with 1A current.

- The battery pack and charger should be stored in clean, dry and ventilated place, avoid contacting with corrosive materials and be away from fire and heat.

10. Product Responsibility

- Akyga Battery assume no res ponsibility for the accident of not operating in accordance with the specification.

- If the specifications, raw materials, production process or production control systems is changed, the change will vary depending on the quality and reliability of data written notice to the customer.

11. Battery Handling Precautions

- Don’t immerse battery in water or allow it to get wet!

- Don’t charge, use and store battery near a heat source such as fire heater! If the battery leaks or releases strange odor, pls remove it from place near fire place immediately. Fully charge the battery before first-time using.

- Don’t reverse the positive and negative pole of battery!

- Don’t throw the battery into fire or heat it!

- Don’t short-circuit battery with wire or other metal objects!

- Don’t nail, knock or trample the battery!

- Don’t disassemble the battery in any way!

- Don’t put the battery into microwave oven or pressure vessel!

- If the battery gives off odor, gets heat, deformation, discoloration or appears and abnormal behaviors, stop using it. Please remove the battery from electrical appliances and stop using it if the battery is being used or charged!

- Don’t use battery in a very hot environment, such as under direct sunlight or in car on hot day. Otherwise, the battery will overheat which will affect battery performance and shorten battery life!

- If the battery leaks and electrolyte leakage enters into the eyes, don’t rub, rinse with water immediately and seek immediate medical assistance. If not in time, eyes will be hurt!

- Ambient temperature will affect the discharge capacity of battery, if the ambient temperature is beyond the standard environment (23±2℃), the discharge capacity will be changed.

12. Special Considerations

- During charging process, if there has odor or unusual noise, please stop charging immediately.

- During discharging process, if there has odor or unusual noise, please stop discharging immediately.

- If there have above behavior during your using process, please contact Akyga Battery, do not disassemble by yourself.