Battery Classification Lithium Battery

Battery Type INR21700

1、Application Scope

This document describes the product specification of the rechargeable lithium battery cells supplied by Akyga Battery.

2、Technology parameters

2.1 The main technical parameters of the battery

NO.	Items		Units	Specifications	Remark
1	Nominal voltage		V	3.6	Average Voltage At 0.2C_5A discharge
2	Nominal capacity		mAh	5000	0.2 C_5A discharge
3	Minimum capacity		mAh	4800	0.2 C_5A discharge
4	Internal resistance		mΩ	≤120	
5	Max. charge voltage		V	4.2V	
6	Cut-off voltage		V	2.5V	
7	Max. continuous charge current		mA	≤5000	
8	Max. continuous discharge current		mA	≤15000	
9	Storage Temperature	3 month	℃	-10~45℃	
		1 Year	℃	-10~20℃	
10	Operating temperature	Charging	℃	10~+45℃	
		Discharging	℃	-10~+50℃	
11	Charging time	Standard charge	H	6.0H	0.2 C_5A 100mA
		quick charge	H	2.4H	0.5 C_5A 2500mA
12	weight		g	50g	

2.2 Performance inspection and testing

NO.	Items	Content	Requirement
1	Standard charge	Charging the cell initially with constant current at 0.3C and then with constant voltage at 4.2V till charge currentdeclines to 0.01C	CC/CV
2	Normal capacity	The capacity means the discharge capacity of the cell, which is measured with discharge current of 0.2C with4.2 V cut-off voltage after standard charge.	Type.5000mAh
3	Cycle life	Test condition： Charge: 0.3C to 4.2V Discharge: 0.2C to 2.5V 60% or more of 1st cycle capacity at 0.2C discharge of Operation.	≥500 times
4	Temperature Characteristics	1. According to item Standard Charge. 2. Capacity comparison at each temperature, measured with constant discharge current 0.2C with 2.5V cut-off. Percentage as an index of the capacity compared with 100% at 25℃.	-10℃: ≥50% 25℃: 100% 60℃: ≥85%

2.3 Battery size

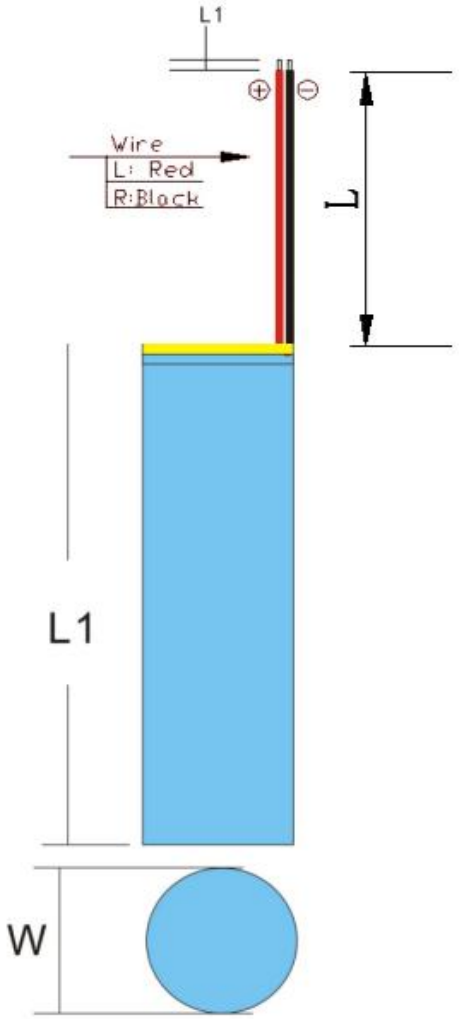

Item	Description	Dimension (mm)
W	Thickness	21.5(MAX)
L1	Height	73.5(MAX)
L	The lead wire length	100±5
The model of lead wire :		UL1571 AWG22#
The model of connector :		
Polarity of connector		

4、PCM parameter　PCM

4.1 Electrical Characteristics

Content	Min	Typ	Max	Unit
Voltage			10	V
Over charge detection voltage	4. 23	4. 28	4. 33	V
Over charge release voltage	4. 03	4. 08	4. 13	V
Over charge detection delay time	80	120	160	ms
Over discharge detection voltage	2. 30	2. 40	2. 50	V
Over discharge release voltage	2. 90	3. 00	3. 10	V
Over discharge detection delay time	40	60	80	ms
Over current detection voltage	16		25	A
Detection delay time	5	7	10	ms
Current consume in normal operation			6	uA
Main loop electrify resistance			60	mΩ
Short protection **Detection condition**				
Short protection **Detection delay time**	200	400	600	us
The working Temperature	−40		+85	℃

NO.	Location	Part Name	Specification	Remark	Qty
1	U1	IC	DW01 SOT-23-6		1
2	U2 U3 U4 U5	MOSFET	8810 TSSOP-8		4
3	C1	Capacitor	0.1uF 20% 25V 0402		1
4	R1	Resistor	100Ω 5% 1/10W 0402		1
5	R2	Resistor	1KΩ 5% 1/10W 0402		1
6	R3				
7	B-B +	Nickel	5*4*0.3	HX	2
8	PCB	LST-21700-2M	21*19.5*0.8mm		1

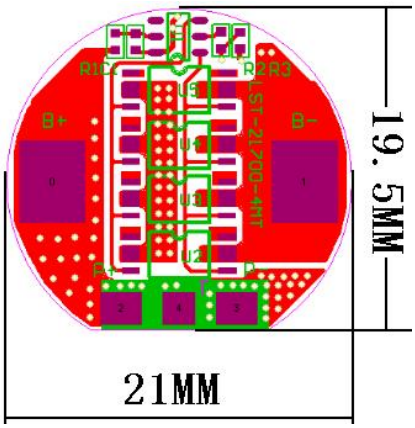

3. Application Circuit

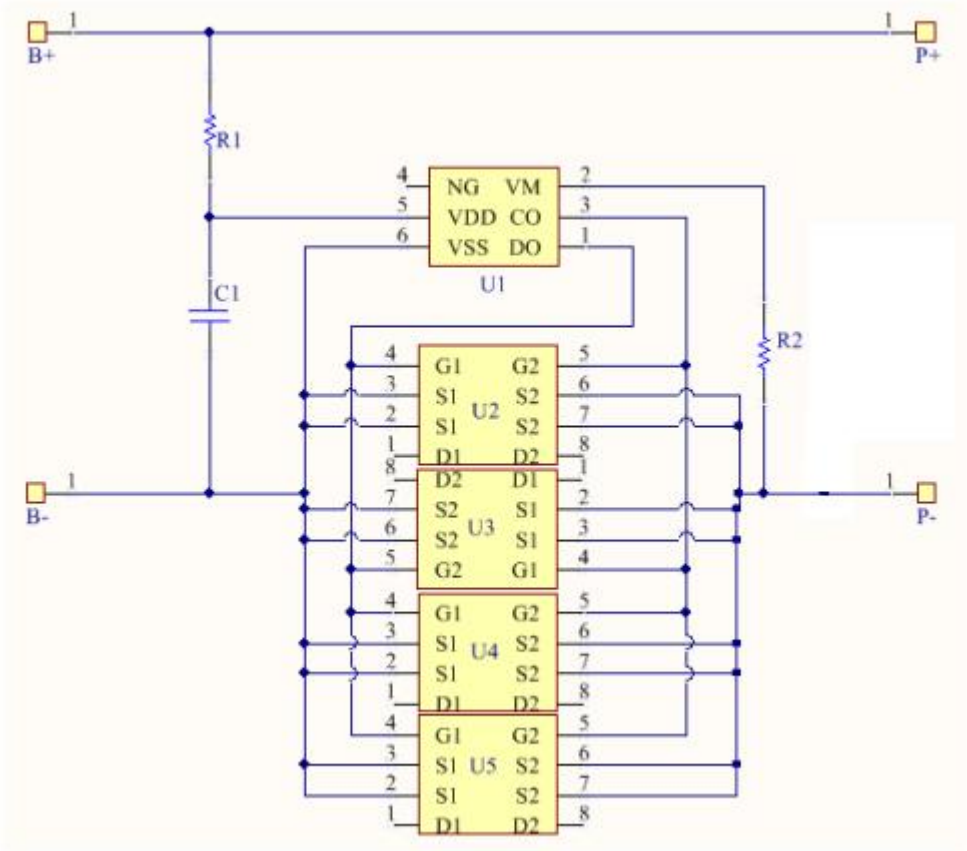

4. PCB Top Layers

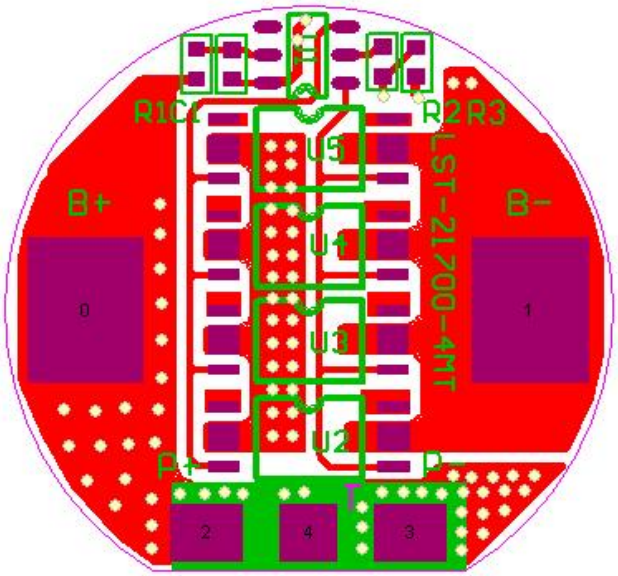

5. PCB Bottom Layer

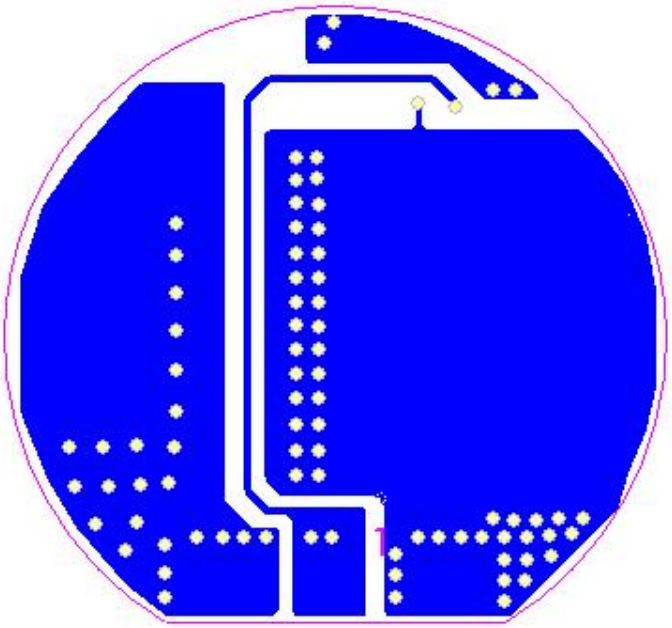

6. Absolute Maximum Ratings:

Parameter	Rating	Unit
Operating Temperature Range	-30~+70	℃
Operating Humidity Range	Less than 85% RH	%RH
Storage Temperature Range	-45~+85	℃
Storage Humidity Range	Less than 85% RH	%RH
Voltage Between Terminals Of P+ and P-	10.0	V
Voltage Between Terminals Of B+ and B-	10.0	V