THIS DRAWING IS UNPUBLISHED. RELEASED FOR PUBLICATION -,- .
© COPYRIGHT - BY TYCO ELECTRONICS CORPORATION. ALL RIGHTS RESERVED.

LOC	DIST
CM	0

REVISIONS

P	LTR	DESCRIPTION	DATE	DWN	APVD
	L	REVISED PER 0G3B-0211-05	6/8/05	SS	RJ

1. PINS TO COMPLY WITH AMP SOLDERABILITY SPEC. 109-11-3.

2. 0.00381 MIN MATTE TIN LEAD PLATE OVER 0.00127 MIN NICKEL.

3. 0.00076 MIN GOLD PLATE IN THE LOCALIZED PLATE AREA, 0.00381 MATTE TIN LEAD IN THE LOCALIZED PLATE AREA, BOTH OVER 0.00127 MIN NICKEL.

4. 0.00381 MIN MATTE TIN PLATE OVER 0.00127 MIN NICKEL.

5. 0.00076 MIN GOLD PLATE IN THE LOCALIZED PLATE AREA, 0.00381 MATTE TIN IN THE LOCALIZED PLATE AREA, BOTH OVER 0.00127 MIN NICKEL.

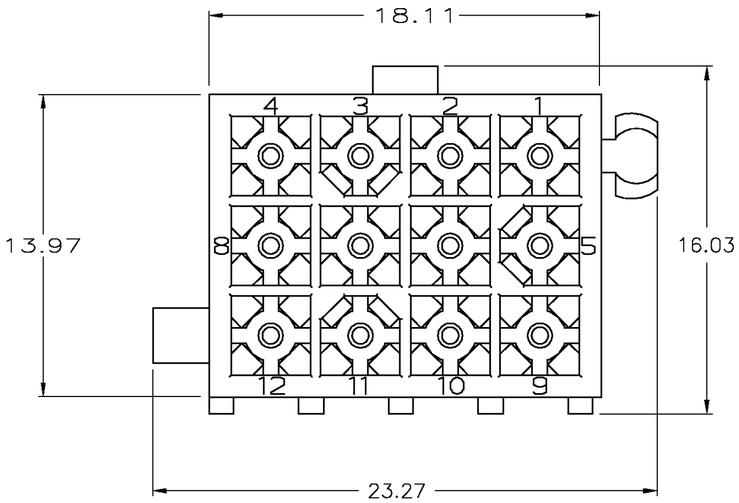

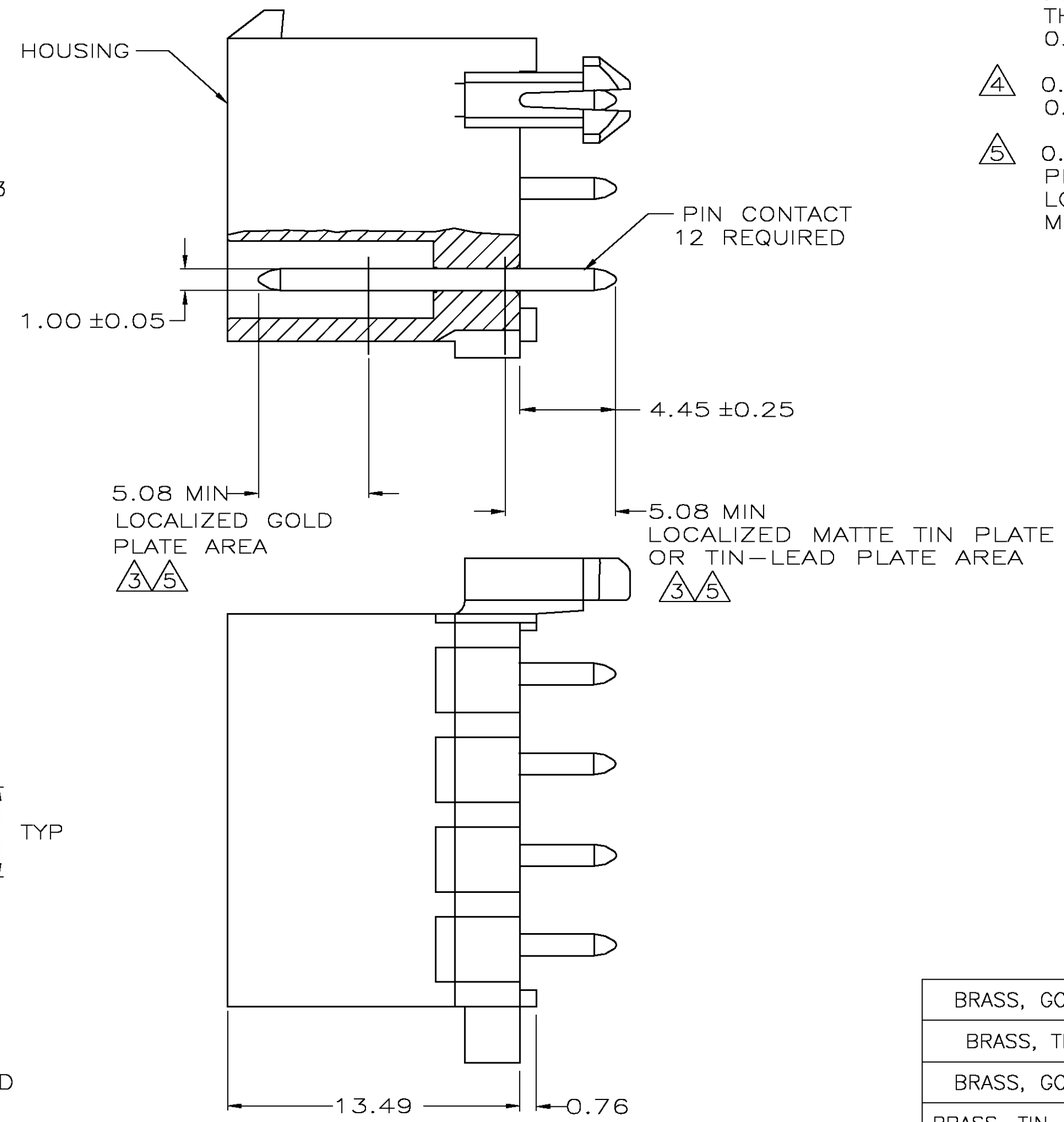

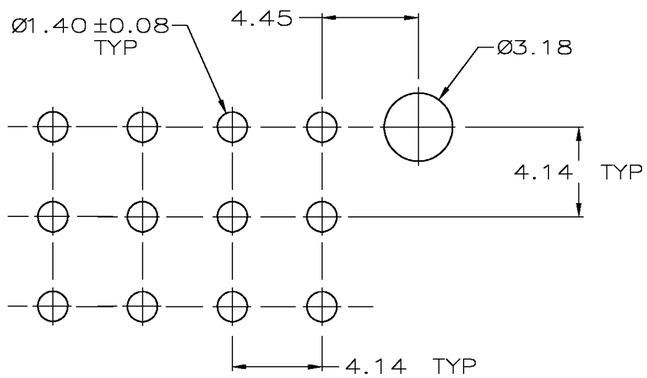

RECOMMENDED LAYOUT FOR 1.57 THICK BOARD
TOLERANCES NON-ACCUMULATIVE

MATERIAL (PIN)	FINISH	MATERIAL (HOUSING)	COLOR	PART NO.
BRASS, GOLD	5	NYLON, UL94V-0	WHITE	1-770186-1
BRASS, TIN	4	NYLON, UL94V-0	WHITE	1-770186-0
BRASS, GOLD	3	NYLON, UL94V-0	WHITE	770186-2
BRASS, TIN-LEAD	2	NYLON, UL94V-0	WHITE	770186-1

THIS DRAWING IS A CONTROLLED DOCUMENT.

DIMENSIONS: mm

TOLERANCES UNLESS OTHERWISE SPECIFIED:
0 PLC ± -
1 PLC ± -
2 PLC ± 0.13
3 PLC ± -
4 PLC ± -
ANGLES ± -

MATERIAL -
FINISH -

DWN S CARPENTER 08JUN05
CHK R JONES 28JUL2003
APVD R JONES 28JUL2003
PRODUCT SPEC -
APPLICATION SPEC -
WEIGHT -

Tyco Electronics Corporation
Harrisburg, Pa 17105-3608

NAME
HEADER ASSEMBLY, 12 CKT,
MINI UNIVERSAL MATE-N-LOK
-

SIZE	CAGE CODE	DRAWING NO	RESTRICTED TO
A2	00779	C-770186	-

CUSTOMER DRAWING | SCALE 5:1 | SHEET 1 OF 1 | REV L

770186