产 品 承 认 书
Product Approval Sheet

编号 NO.	
日期 Date	

客户 (Customer)	
品名 (Product)	Resettable PPTC Fuse 自恢复保险丝
系列 (Series)	BNM series 1812 常规系列

料号 (Part No.)	规格描述 (Specification)	备注 (Remark)

环保符合性说明 (Instructions for RoHS)
本产品符合：☑ RoHS 2.0 ☑ HF ☑ REACH ☑ 其他备注

供应商-贝特 Supplier-Betterfuse		确认合格章 (Confirm qualified Signet)	客 户 (Customer)	零件承认章 (Approval Signet)
制 作 Make	Luo			
审 核 Check	Wang			
确 认 Approval	Lu			

联络 (Contact)			
业务 (Sales)	电话 (Telephone)	手机 (Cellphone)	邮箱 (E-mail)

零件承认后敬请回签一份给我司留存，或将承认后的封面传真（0769-8352 1857）至我司，谢谢！
Please return a copy or fax the cover to us after the product being recognized, thanks! （0769-8352 1857）

履历 (Document Record)

序号 (No.)	日期(Date)	修订内容 (Modified Content)	页码 (Page)	版本 (Edition)	制定人 (Prepared by)	审核人 (Checked by)	备注 (Remark)
1	2019.8.1	Draft	10	A/0	Luo	Wang	
2	2020.6.20	Packing	10	A/1	Luo	Wang	

目 录 (Table of contents)

1. GENERAL INFORMATION（基本信息） 3
2. PART NUMBERING SYSTEM（料号编码系统） 3
3. CONSTRUCTION AND MECHANICAL CHARACTERISTICS（产品结构特性） 3
4. ELECTRICAL SPECIFICATIONS(电气特性) 5
5. THERMAL DERATING CHART-I_H (A)（温度-电流折减） 6
6. PHYSICAL CHARACTERISTICS（物理特性） 7
7. TEST PROCEDURES AND REQUIREMENTS（测试项目及要求） 7
8. SOLDER REFLOW PROFILES AND PAD LAYOUT DIMENSIONS（回流焊焊接曲线及焊盘尺寸） 8
9. PACKING INFORMATION（包装信息） 9
10. ORDERING INFORMATION（订单信息） 9
11. STORAGE（储存） 10
12. WARING（警告） 10

1. GENERAL INFORMATION（基本信息）

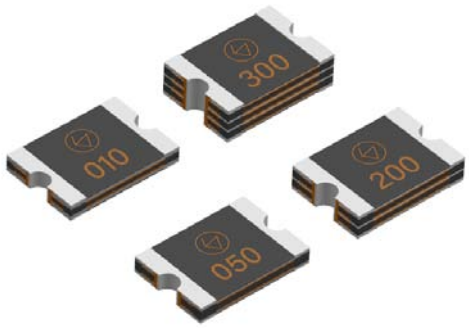

- RoHS Compliant, Halogen Free, Lead Free 符合 RoHS,无卤无铅
- Fast tripping, 1812 Size 快速动作，1812 尺寸
- Surface mountable, Solid state 表面贴装，固态
- Holding Current 维持电流：0.1A-3.0A, @25℃
- Maximum Voltage 最大电压：8V-60V
- Operating Temperature 工作温度：-40℃~ 85℃
- Agency Approvals 认证许可 **UL** E345393, **TUV** R50450107

2. PART NUMBERING SYSTEM（料号编码系统）

Part NO. 料号	Serial NO. 系列号	Size 型号	I_H 维持电流	V_{MAX} 最大工作电压	Packing 包装数量	Supplementary Code 补充码
BNM01009A000	Normal series 常规系列	1812	0.1A	60V	1500	000

BN - M - 0100 - 9 - A - 000

Serial NO.	Size	IH	VMAX	Packing	Supplementary Code
BN: Normal series	M: 1812	0100: 0.1A 1110: 1.1A 1300: 3.0A	1: 8V 4: 13.2V 5: 16V 6: 24V 7: 30V 8: 33V 9: 60V	A: 1500 B: 2000	

3. CONSTRUCTION AND MECHANICAL CHARACTERISTICS（产品结构特性）

Dimensions 尺寸(unit 单位: mm)

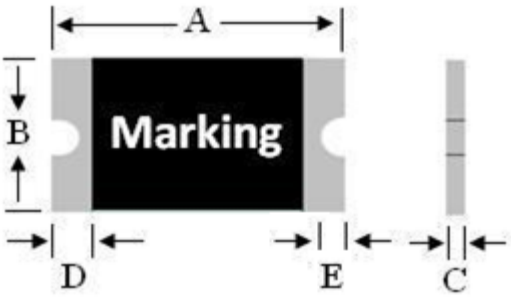

Part NO. 料号	Marking 标识	A		B		C		D	E
		Min	Max	Min	Max	Min	Max	Min	Min
BNM01009A000	ⓔ010	4.37	4.73	3.07	3.41	0.5	1.1	0.3	0.15
BNM01409A000	ⓔ014	4.37	4.73	3.07	3.41	0.5	1.1	0.3	0.15
BNM02007A000	ⓔ020	4.37	4.73	3.07	3.41	0.5	1.1	0.3	0.15
BNM03007A000	ⓔ030	4.37	4.73	3.07	3.41	0.5	1.1	0.3	0.15
BNM05005B000	ⓔ050	4.37	4.73	3.07	3.41	0.4	0.9	0.3	0.15
BNM05006B000	ⓔ050	4.37	4.73	3.07	3.41	0.4	0.9	0.3	0.15
BNM05007B000	ⓔ050	4.37	4.73	3.07	3.41	0.5	1.1	0.3	0.15
BNM07504B000	ⓔ075	4.37	4.73	3.07	3.41	0.4	0.9	0.3	0.15
BNM07506B000	ⓔ075	4.37	4.73	3.07	3.41	0.5	1.2	0.3	0.15
BNM07508A000	ⓔ075	4.37	4.73	3.07	3.41	0.5	1.2	0.3	0.15
BNM11101B000	ⓔ110	4.37	4.73	3.07	3.41	0.4	0.9	0.3	0.15
BNM11105B000	ⓔ110	4.37	4.73	3.07	3.41	0.4	0.9	0.3	0.15
BNM11106A000	ⓔ110	4.37	4.73	3.07	3.41	0.6	1.3	0.3	0.15
BNM11108A000	ⓔ110	4.37	4.73	3.07	3.41	0.6	1.7	0.3	0.15
BNM11251B000	ⓔ125	4.37	4.73	3.07	3.41	0.5	1.0	0.3	0.15
BNM11255B000	ⓔ125	4.37	4.73	3.07	3.41	0.5	1.2	0.3	0.15
BNM11256A000	ⓔ125	4.37	4.73	3.07	3.41	0.6	1.3	0.3	0.15
BNM11501B000	ⓔ150	4.37	4.73	3.07	3.41	0.3	0.9	0.3	0.15
BNM11504B000	ⓔ150	4.37	4.73	3.07	3.41	0.4	1.1	0.3	0.15
BNM11505A000	ⓔ150	4.37	4.73	3.07	3.41	0.5	1.2	0.3	0.15
BNM11506A000	ⓔ150	4.37	4.73	3.07	3.41	0.6	1.7	0.3	0.15
BNM11601B000	ⓔ160	4.37	4.73	3.07	3.41	0.4	1.0	0.3	0.15
BNM11604B000	ⓔ160	4.37	4.73	3.07	3.41	0.5	1.3	0.3	0.15
BNM11605A000	ⓔ160	4.37	4.73	3.07	3.41	0.6	1.7	0.3	0.15
BNM12001B000	ⓔ200	4.37	4.73	3.07	3.41	0.4	1.0	0.3	0.15
BNM12004A000	ⓔ200	4.37	4.73	3.07	3.41	0.4	1.2	0.3	0.15
BNM12005A000	ⓔ200	4.37	4.73	3.07	3.41	0.5	1.3	0.3	0.15
BNM12505A000	ⓔ250	4.37	4.37	3.07	3.41	0.6	1.7	0.3	0.15
BNM12601A000	ⓔ260	4.37	4.73	3.07	3.41	0.5	1.2	0.3	0.15

BNM12604A000	㊀260	4.37	4.73	3.07	3.41	0.6	1.5	0.3	0.15
BNM12605A000	㊀260	4.37	4.73	3.07	3.41	0.6	1.7	0.3	0.15
BNM13001A000	㊀300	4.37	4.73	3.07	3.41	0.5	1.5	0.3	0.15

4. ELECTRICAL SPECIFICATIONS（电气特性）

Part NO. 料号	V_{MAX} (V)	I_{MAX} (A)	I_H (A)	I_T (A)	P_D (W)	Maximum Time-to-Trip 最大动作时间		Resistance 电阻	
						Current (A)	Time (Sec)	R_{MIN} (Ω)	$R1_{MAX}$ (Ω)
BNM01009A000	60.0	100.0	0.1	0.3	1.2	0.5	1.5	0.75	15.0
BNM01409A000	60.0	100.0	0.14	0.34	1.2	1.5	0.15	0.65	6.0
BNM02007A000	30.0	100.0	0.2	0.4	1.2	8.0	0.02	0.35	5.0
BNM03007A000	30.0	100.0	0.3	0.6	1.2	8.0	0.1	0.25	3.0
BNM05005B000	16.0	100.0	0.5	1.0	1.2	8.0	0.15	0.15	1.0
BNM05006B000	24.0	100.0	0.5	1.0	1.2	8.0	0.15	0.15	1.0
BNM05007B000	30.0	100.0	0.5	1.0	1.2	8.0	0.15	0.15	1.0
BNM07504B000	13.2	100.0	0.75	1.5	1.2	8.0	0.2	0.09	0.45
BNM07506B000	24.0	100.0	0.75	1.5	1.2	8.0	0.2	0.09	0.45
BNM07508A000	33.0	100.0	0.75	1.5	1.2	8.0	0.2	0.09	0.45
BNM11101B000	8.0	100.0	1.1	2.2	1.2	8.0	0.3	0.05	0.25
BNM11105B000	16.0	100.0	1.1	2.2	1.2	8.0	0.3	0.05	0.25
BNM11106A000	24.0	100.0	1.1	2.2	1.2	8.0	0.3	0.05	0.25
BNM11108A000	33.0	100.0	1.1	2.2	1.2	8.0	0.3	0.05	0.25
BNM11251B000	8.0	100.0	1.25	2.5	1.2	8.0	0.4	0.05	0.2
BNM11255B000	16.0	100.0	1.25	2.5	1.2	8.0	0.4	0.05	0.2
BNM11256A000	24.0	100.0	1.25	2.5	1.2	8.0	0.4	0.05	0.2
BNM11501B000	8.0	100.0	1.5	3.0	1.2	8.0	0.5	0.04	0.16
BNM11504B000	13.2	100.0	1.5	3.0	1.2	8.0	0.5	0.04	0.16
BNM11505A000	16.0	100.0	1.5	3.0	1.2	8.0	0.5	0.04	0.16
BNM11506A000	24.0	100.0	1.5	3.0	1.2	8.0	0.5	0.04	0.16
BNM11601B000	8.0	100.0	1.6	3.2	1.2	8.0	1.0	0.03	0.13
BNM11604B000	13.2	100.0	1.6	3.2	1.2	8.0	1.0	0.03	0.13
BNM11605A000	16.0	100.0	1.6	3.2	1.2	8.0	1.0	0.03	0.13
BNM12001B000	8.0	100.0	2.0	4.0	1.2	8.0	2.0	0.02	0.1

BNM12004A000	13.2	100.0	2.0	4.0	1.2	8.0	2.0	0.02	0.1
BNM12005A000	16.0	100.0	2.0	4.0	1.2	8.0	2.0	0.02	0.1
BNM12505A000	16.0	100.0	2.5	5.0	1.2	8.0	2.0	0.018	0.08
BNM12601A000	8.0	100.0	2.6	5.2	1.2	8.0	2.5	0.015	0.047
BNM12604A000	13.2	100.0	2.6	5.2	1.2	8.0	2.5	0.015	0.05
BNM12605A000	16.0	100.0	2.6	5.2	1.2	8.0	2.5	0.015	0.05
BNM13001A000	8.0	100.0	3.0	6.0	1.2	8.0	4.0	0.012	0.04

I_H: Holding current, maximum current at which the device will not interrupt in 25℃ still air.
维持电流，在 25℃环境下 PPTC 最大工作电流。

I_T: Tripping current, minimum current at which the device from low resistance to high resistance in 25℃ still air.
在 25℃环境下 PPTC 从低阻到高阻转变的最小电流。

V_{MAX}: Maximum continuous voltage device can withstand without damage at rated current.
PPTC 产品最大工作电压。

I_{MAX}: Maximum fault current device can withstand without damage at rated voltage.
PPTC 产品承受最大电流。

Maximum Time-to-trip: Maximum time to trip at assigned current.
PPTC 产品在规定电流下的最大动作时间。

P_D: Typical amount of power dissipated from the device when in 25℃ still air environment.
PPTC 产品动作状态下的功率消耗。

R_{MIN}: Minimum resistance of device at 25℃ prior to tripping.
PPTC 产品未动作之前的最小电阻。

$R1_{MAX}$: Maximum resistance of device is measured one hour post reflow.
PPTC 产品回流焊焊后 1 小时的最大电阻。

5. THERMAL DERATING CHART-I_H (A)（温度-电流折减）

Part NO. 料号	Maximum holding current at assigned ambient temperature 规定环境温度下的最大维持电流（A）								
	-40˚C	-20˚C	0˚C	25˚C	40˚C	50˚C	60˚C	70˚C	85˚C
BNM01009A000	0.16	0.14	0.12	0.1	0.08	0.07	0.06	0.05	0.03
BNM01409A000	0.23	0.19	0.17	0.14	0.12	0.1	0.09	0.08	0.06
BNM02007A000	0.29	0.26	0.23	0.2	0.17	0.15	0.14	0.12	0.1
BNM03007A000	0.44	0.39	0.35	0.3	0.26	0.23	0.21	0.18	0.15
BNM05005B000	0.77	0.68	0.59	0.5	0.44	0.4	0.37	0.33	0.29
BNM05006B000	0.77	0.68	0.59	0.5	0.44	0.4	0.37	0.33	0.29
BNM05007B000	0.77	0.68	0.59	0.5	0.44	0.4	0.37	0.33	0.29
BNM07504B000	1.15	1.01	0.88	0.75	0.65	0.6	0.55	0.49	0.43
BNM07506B000	1.15	1.01	0.88	0.75	0.65	0.6	0.55	0.49	0.43
BNM07508A000	1.15	1.01	0.88	0.75	0.65	0.6	0.55	0.49	0.43

BNM11101B000	1.55	1.4	1.25	1.1	0.93	0.83	0.73	0.63	0.5
BNM11105B000	1.55	1.4	1.25	1.1	0.93	0.83	0.73	0.63	0.5
BNM11106A000	1.55	1.4	1.25	1.1	0.93	0.83	0.73	0.63	0.5
BNM11108A000	1.55	1.4	1.25	1.1	0.93	0.83	0.73	0.63	0.5
BNM11251B000	2.0	1.75	1.52	1.25	1.0	0.95	0.9	0.75	0.53
BNM11255B000	2.0	1.75	1.52	1.25	1.0	0.95	0.9	0.75	0.53
BNM11256A000	2.0	1.75	1.52	1.25	1.0	0.95	0.9	0.75	0.53
BNM11501B000	2.25	2.0	1.8	1.5	1.26	1.14	1.05	0.92	0.73
BNM11504B000	2.25	2.0	1.8	1.5	1.26	1.14	1.05	0.92	0.73
BNM11505A000	2.25	2.0	1.8	1.5	1.26	1.14	1.05	0.92	0.73
BNM11506A000	2.25	2.0	1.8	1.5	1.26	1.14	1.05	0.92	0.73
BNM11601B000	2.45	2.15	1.89	1.6	1.34	1.25	1.15	0.96	0.79
BNM11604B000	2.45	2.15	1.89	1.6	1.34	1.25	1.15	0.96	0.79
BNM11605A000	2.45	2.15	1.89	1.6	1.34	1.25	1.15	0.96	0.79
BNM12001B000	2.8	2.6	2.36	2.0	1.72	1.56	1.4	1.2	1.04
BNM12004A000	2.8	2.6	2.36	2.0	1.72	1.56	1.4	1.2	1.04
BNM12005A000	2.8	2.6	2.36	2.0	1.72	1.56	1.4	1.2	1.04
BNM12505A000	3.3	3.06	2.9	2.5	2.2	2.05	1.9	1.75	1.53
BNM12601A000	3.4	3.16	3.0	2.6	2.3	2.15	2.0	1.85	1.63
BNM12604A000	3.4	3.16	3.0	2.6	2.3	2.15	2.0	1.85	1.63
BNM12605A000	3.4	3.16	3.0	2.6	2.3	2.15	2.0	1.85	1.63
BNM13001A000	4.13	3.75	3.3	3.0	2.61	2.43	2.25	2.0	1.78

6. PHYSICAL CHARACTERISTICS（物理特性）

Terminal Pad Materials（焊端材料）	Tin-Plated Nickle-copper(锡-镍-铜)
Soldering characteristics (焊接规范)	采用 EIA specification RS 186-9E 和 ANSI/J-STD-002 类目 3.
Moisture Sensitivity（湿敏性）	满足 Level 2a, per IPC/JEDEC J-STD 020C

7. TEST PROCEDURES AND REQUIREMENTS（测试项目及要求）

Test Item 测试项目	Test Conditions 测试条件	Accept/Reject Criteria 接受标准
Initial Resistance 初始电阻	In still air at 25℃ 静止空气	$R_{MIN} \leq R \leq R1_{MAX}$
Time to Trip 动作时间	Specified current 规定电流, V_{MAX}, 25℃	t≤ Maximum Time to Trip 最大动作时间
Holding Current 维持电流	1 hour 小时, at I_H, 25℃	No trip 不动作
Trip Endurance 动作耐久性	V_{MAX}, I_{MAX}, 1 hour 小时	No arcing or burning 不烧不裂

8. SOLDER REFLOW PROFILES AND PAD LAYOUT DIMENSIONS（回流焊焊接曲线及焊盘尺寸）

Solder pad layout dimensions 焊盘尺寸（mm）			
Normal Value 常规值	F	G	H
	1.78	3.45	3.20

Profile Feature 图形特征 Pb-Free 无铅
Average ramp up rate (Ts_{MAX} to Tp) 3℃/ max. 平均上升速度最大 3 秒.
Preheat 预热 ●Temperature min 最小温度(Ts_{MIN}) 150℃ ●Temperature max 最大温度(Ts_{MAX}) 200℃ ●Time 时间(ts_{MIN} to ts_{MAX}) 60-120 seconds 秒
Time maintained above 维持下述温度以上的时间: ●Temperature 温度(T_L) 217℃ ●Time 时间(t_L) 60-150 seconds 秒
Peak/Classification temperature 峰值温度 (T_P) 260℃
Time within 5℃ of actual peak temperature 峰值温度正负 5℃的时间 Time 时间(t_P) 30 seconds max 最大 30 秒.
Ramp down rate3℃/second max 最大降温速率 3℃/秒
Time 25℃ to peak temperature 8 minutes max 从 25℃到峰值温度的时间 最多 8 分钟

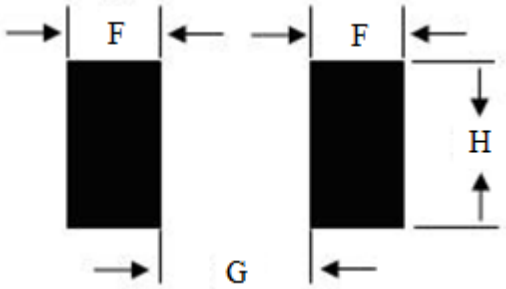

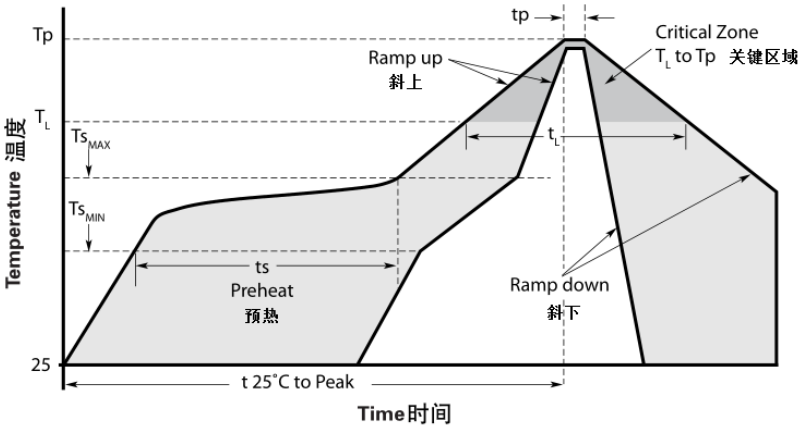

Recommended reflow methods: IR, hot air oven, N2 environment for lead-free.推荐回流焊方法：红外线，热空气，氮气，无铅。

Devices are not designed to be wave soldered to the bottom side of the board.产品不适合采用波峰焊焊接。

Recommended maximum paste thickness is 0.25mm (0.01inch).推荐使用的最大锡膏厚度 0.25mm(0.01 英寸)。

Devices can be cleaned using standard industry methods and aqueous solvents.元件可用标准工业方法及水溶性溶剂清洗。

Devices can be reworked using the standard industry practices .Please also avoid direct contact to the device. 采用标准的工业方法，产品可以返工，但避免与元件进行直接接触。

If reflow temperature exceed the recommended profile, devices may not meet the performance requirements.如果焊接的温度超过了推荐值，产品的使用性能可能不满足要求。

9. PACKING INFORMATION（包装信息）

unit 单位: mm

Tape Specifications 卷带包装规范 EIA 481-1	
W	12.0±0.2
P0	4.0±0.1
P1	8.0±0.1
P2	2.0±0.05
A0	3.66±0.1
B0	4.98±0.1
D0	1.5+0.1/-0
D1	1.5±0.1
F	5.5±0.1
E	1.75±0.1
T	0.20±0.05 0.25±0.05
K0	0.95±0.1 1.50±0.1
Reel Dimensions 卷盘尺寸	
A	178.0±1.0
D	13.3 ± 0.3
W	13.5±1.0
N	59.0±1.0

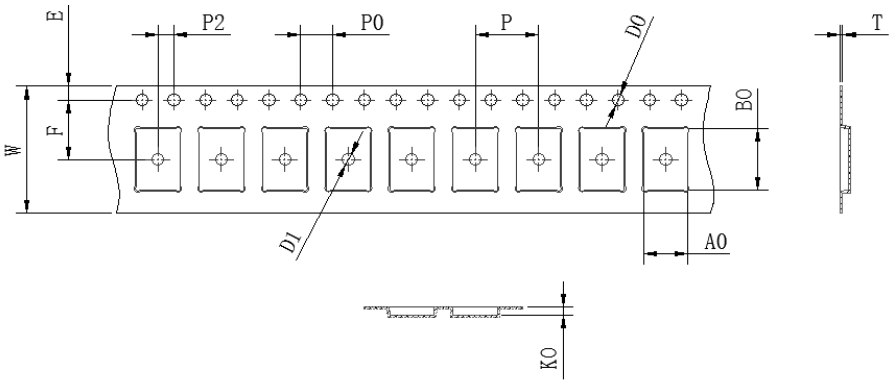

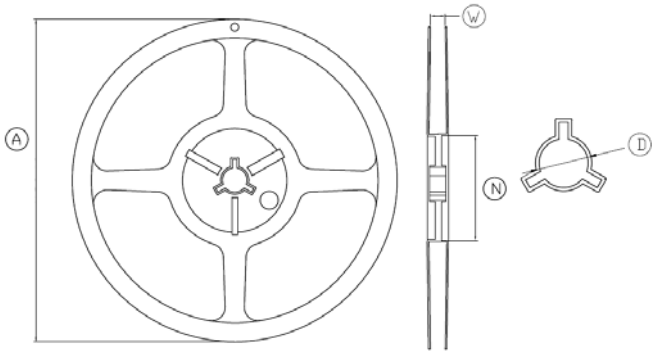

10. ORDERING INFORMATION（订单信息）

The following information is necessary in order to place your order with us correctly:
为了确保订单内容准确请核对以下信息

Series 系列	Part NO.料号	Supplementary Code 补充码	Quantity 数量（个）
BNM series 1812 常规系列			

11. STORAGE（储存）

The maximum ambient temperature shall not exceed 40℃.Storage temperatures higher than 40℃could result in the deformation of packaging materials. The maximum relative humidity recommended for storage is 70%. High humidity with high temperature can accelerate the oxidation of the solder plating on the termination and reduce the solderability of the components. Sealed plastic bags with desiccant shall be used to reduce the oxidation of the termination and shall only be opened prior to use。最大存储温度不超过 40℃，否则会导致包装材料变形，储存的最大相对湿度是 70%，高温高湿会加速焊盘氧化影响元件的焊接性能。装有干燥剂的塑胶密封袋包装可以减轻焊端氧化，密封袋请于产品使用前再打开。

12. WARING（警告）

- Use PPTC beyond the maximum ratings or improper use may result in device damage, electrical arcing and flame.
  超出额定范围进行操作或不正确的使用产品都可能会导致元件损坏，并可能产生电弧和火花。
- PPTC are intended for protection against occasional over current or over temperature fault conditions and should not be used when repeated fault conditions or prolonged trip events are anticipated.
  PPTC 元件用于当发生偶然的过流或超温故障时进行保护，切勿用于故障频繁发生的场合或预期会发生超长时间的动作事件的场合。
- Use PPTC with a large inductance in circuit will generate a circuit voltage above the rated voltage of the PPTC.
  在电感量很大的电路中使用 PPTC,可能会产生超过元件额定电压的回路电压。
- Avoid impact PPTC device its thermal expansion like placed under pressure or installed in limited space.
  避免 PPTC 元件处在外界压力下或安装在有限空间里影响产品的热膨胀。
- Contamination of the PPTC material with certain silicon based oils or some aggressive solvents can adversely impact the performance of the devices.
  PPTC 材料污染了一定量的硅基油或某些侵蚀性溶剂后可能会影响元件的使用性能。
- Users should independently evaluate the suitability of the product and test each product selected for their own application.
  用户应该为他们的应用独立地评估和测试每一款产品的适用性。

CERTIFICATE OF COMPLIANCE

Certificate Number	20191030-E345393
Report Reference	E345393-20191025
Issue Date	2019-OCTOBER-30

Issued to:	DONGGUAN BETTER ELECTRONICS TECHNOLOGY CO LTD Rm 601 Of 16 Blk Xinzhuyuan No 4 Xinzhu Rd Songshanlake Hightech Industrial Development Zone Dongguan Guangdong 523808 CHINA
This certificate confirms that representative samples of	COMPONENT - THERMISTOR-TYPE DEVICES SEE ADDENDUM PAGE
	Have been investigated by UL in accordance with the component requirements in the Standard(s) indicated on this Certificate. UL Recognized components are incomplete in certain constructional features or restricted in performance capabilities and are intended for installation in complete equipment submitted for investigation to UL LLC.
Standard(s) for Safety:	UL 1434 Thermistor-Type Devices CSA Component Acceptance Service No. 53, LTR I-003-2013 PTC Thermistors for Overcurrent Protection in Electrical and Electronic Equipment
Additional Information:	See the UL Online Certifications Directory at https://iq.ulprospector.com for additional information.

This *Certificate of Compliance* does not provide authorization to apply the UL Recognized Component Mark. Only the UL Follow-Up Services Procedure provides authorization to apply the UL Mark.

Only those products bearing the UL Recognized Component Mark should be considered as being UL Certified and covered under UL's Follow-Up Services.

Look for the UL Recognized Component Mark on the product.

Bruce Mahrenholz, Director North American Certification Program

UL LLC

Any information and documentation involving UL Mark services are provided on behalf of UL LLC (UL) or any authorized licensee of UL. For questions, please contact a local UL Customer Service Representative at http://ul.com/aboutul/locations/

CERTIFICATE OF COMPLIANCE

Certificate Number 20191030-E345393
Report Reference E345393-20191025
Issue Date 2019-OCTOBER-30

This is to certify that representative samples of the product as specified on this certificate were tested according to the current UL requirements.

Thermistor-type devices, Polymeric Positive Temperature Coefficient (PTC) Current Limiters, Models BNM and BLM Series

Models: BNM01009, BNM01409, BNM02007, BNM03007, BNM05005, BNM05006, BNM05007, BNM07504, BNM07506, BNM07508, BNM11101, BNM11105, BNM11106, BNM11108, BNM11251, BNM11255, BNM11256, BNM11501, BNM11504, BNM11505, BNM11506, BNM11601, BNM11604, BNM11605, BNM12001, BNM12004, BNM12005, BNM12505, BNM12601, BNM12604, BNM12605, BNM13001, BLM12603, BLM13000, BLM13003, BLM13500, BLM13503, BLM14000, BLM14003, BLM14500, BLM14503, BLM15000, BLM15003, BLM15500, BLM15503, BLM16000, BLM16003, BLM16500, BLM16503, BLM17000, BLM17003, BLM17500, BLM17503, BLM18000, BLM18003, BLM18500, BLM18503, BLM19000, BLM19003

Bruce Mahrenholz, Director North American Certification Program

UL LLC

Any information and documentation involving UL Mark services are provided on behalf of UL LLC (UL) or any authorized licensee of UL. For questions, please contact a local UL Customer Service Representative at http://ul.com/aboutul/locations/

TÜV Rheinland (China) Ltd.
Member of TÜV Rheinland Group

TÜVRheinland®
Precisely Right.

Dongguan Better Electronics
Technology Co., Ltd.
Yan Wenhua
-
Room 601 of 16 Block,Xinzhuyuan No
4,
Xinzhu Road, Songshanlake Hightech
Ind. Development Zone Dongguan
City, Guangdong Province 523808

Date : 15.11.2019
Our ref. : RW 05
Your ref.:

Ref : R TÜV-Mark Approval

Type of Equipment : Polymeric PTC Thermistors for Current Limitation
Model Designation : See Certificate
Certificate No. : R 50450107 0001
Report No. : 50277614 001

Dear Yan Wenhua,

The above specified technical equipment has been tested and found to be in accordance with the relevant requirements.

Enclosed you will find the certificate of approval.

If cancellation of the certificate is submitted by November 15 in a given year, no fee will be charged for the following year.

We appreciate your kind support and would like to offer our assistance and continuous services in the future.

Please contact our office for approval of your new products.

With kind regards,

Certification Body

G. Yin

Enclosure

TÜV Rheinland (China) Ltd.
莱茵检测认证服务（中国）有限公司

No. 01/03B-08, Floor 7 and No. 01/04B-08, Floor 11, AVIC Building, No.10B, Central Road, East 3rd Ring Road, Chaoyang District, Beijing, P.R. China

北京市朝阳区东三环中路乙10号
艾维克大厦第7层第01、03B-08号，
第11层第01、04B-08号
邮编：100022

Tel: (8610)8524 2222
Fax: (8610)8524 2200
e-mail: info@bj.chn.tuv.com
Internet: http://www.chn.tuv.com

Zertifikat *Certificate*

TÜVRheinland®

Zertifikat Nr. *Certificate No.*
R 50450107

Blatt *Sheet*
0001

Ihr Zeichen *Client Reference*	**Unser Zeichen** *Our Reference*	**Ausstellungsdatum**	*Date of Issue*
	05-RW-50277614 001	15.11.2019	*(day/mo/yr)*

Genehmigungsinhaber *License Holder*
Dongguan Better Electronics
Technology Co., Ltd.
Room 601 of 16 Block,Xinzhuyuan No 4
Xinzhu Road, Songshanlake Hightech
Ind. Development Zone Dongguan
City, Guangdong Province 523808
P. R. China

Fertigungsstätte *Manufacturing Plant*
Dongguan Better Electronics
Technology Co.,Ltd. ,
Second Branch Factory
No.7, Sanhe Road, Hengkeng
Administrative Zone, Liaobu Town,
Dongguan City, Guangdong Province
P. R. China

Prüfzeichen *Test Mark*

TÜVRheinland® CERTIFIED
Type Approved
Safety
Regular Production
Surveillance
www.tuv.com
ID 1419074467

Geprüft nach *Tested acc. to*
EN 62319-1:2005
EN 62319-1-1:2005

Zertifiziertes Produkt (Geräteidentifikation)
Certified Product (Product Identification)

Lizenzentgelte - Einheit
License Fee - Unit

Kaltleiter (Polymeric PTC Thermistors for Current Limitation)

Type Designation	: 1) BNMxxxxx 2) BLMxxxxx	15

1)xxxxx = 01009 to 13001; 2)xxxxx = 12603 to 19003
Detail see Appendix 1

Trademark	:	Better Better(logo)
Upper/Lower Category Temperatures	:	+85°C/-40°C
Maximum Voltage	:	See Appendix 1
Maximum Current	:	See Appendix 1
Hold current	:	See Appendix 1
Tripping Current	:	See Appendix 1
Residual Current at Umax.	:	See Appendix 1
Zero-power Resistance	:	See Appendix 1

Remark : The labelling requirements acc. to EU Directive 2001/95 have to be observed for distribution within the EEA
The installation has to be carried out according to installation instruction accompanying the products.

15

ANLAGE (Appendix): 1

Dem Zertifikat liegt unsere Prüf- und Zertifizierungsordnung zugrunde und es bestätigt die Konformität des Produktes mit den oben genannten Standards und Prüfgrundlagen. Zusätzliche Anforderungen in Ländern, in denen das Produkt in Verkehr gebracht werden soll, müssen zusätzlich betrachtet werden. Die Herstellung des zertifizierten Produktes wird überwacht.
This certificate is based on our Testing and Certification Regulation and states the conformity of the product with the standards and testing requirements as indicated above. Any additional requirements in countries where the product is going to be marketed have to be considered additionally. The manufacturing of the certified product is subject to surveillance.

Zertifizierungsstelle

TÜV Rheinland LGA Products GmbH Zertifizierungsstelle

TÜV Rheinland LGA Products GmbH, Tillystraße 2, 90431 Nürnberg
Tel.: +49 221 806-1371 e-mail: cert-validity@de.tuv.com
Fax: +49 221 806-3935 http://www.tuv.com/safety

TÜV, TÜEV and TÜV are registered trademarks. Utilisation and application requires prior approval.