承　　认　　书
APPROVAL　SHEET

编 号 No.	
日期 Date	

客　　户 Customer	

品　　名 Product	**Disc Type Varistor for Surge Protection**
系　　列 Series	**05D Series**

料号 Part No.		规格描述 Specification	备注 Remark
贝特电子 Betterfuse			
客　　户 Customer			

环保特别提示 Special instructions for environmental protection
本产品：

供应商-贝特电子 Supplier-Betterfuse		零件承认章 Approval Signet	客　　户 Customer	零件承认章 Approval Signet
制 作 Make	YaLan Wang	东莞市贝特电子科技股份有限公司		
审 核 Check	Fei Gao			
确 认 Approval	Jun Li			

联络 Contact			
业务 Sales	电话 Telephone	手机 Cellphone	邮箱 E-mail
零件承认后敬请回签一份给我司留存，或将承认后的封面传真（0769-8352 1857）至我司，谢谢！			

Document Record

No.	Date	Modified Content	Page	Edition	Prepared/modified by	Checked by
1	2015.3.20	Initial		A/0	Jeffery	Gem Guo
2	2019.03.11	Update product parameters		A/1	Xiang Xiong	Jun Li
3	2019.09.03	Add to the content	5	A/2	YaLan Wang	Fei Gao
4	2019.12.31	Update content		A/3	YaLan Wang	Fei Gao
5	2020.04.03	Update content		A/4	YaLan Wang	Fei Gao
6						
7						
8						
9						
10						
11						
12						

TABLE OF CONTENTS

1. SCOPE AND DESCRIPTION

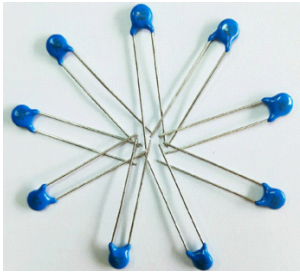

Following electronic product specifications apply to piezoresistor of the 05D series. The 05D series is High surge current handling capability for over-voltage protection.

Its main applications are for transistor, diode, IC, thyristor or triac semiconductor protection,surge protection in consumer electronics, in industrial electronics, in electronic home appliances, gas and petroleum appliances,relay and electromagnetic valve surge absorption.

2. GENERAL INFORMATION

2.1 Features

* Wide operating voltage (V 0.1mA) range from 18V to 750V.
* Fast responding to transient over-voltage.
* Large absorbing transient energy capability.
* Low clamping ratio and no follow-on current.
* Meets MSL level 1, per J-STD-020 ISO9001-2018
* Safety number : UL- E317616 VDE-40028836 CQC-12001076477

2.2 Application

*Transistor, Diode, IC, Thyristor or Triac semiconductor protection.
* Surge protection in consumer electronics.
* Surge protection in industrial electronics.
* Surge protection in electronic home appliances, gas and petroleum appliances.
* Relay and electromagnetic valve surge absorption.

3. AGENCY APPROVALS

Agency	Agency File Number	Type.
c UL us	E317616	050D101K;050D121K;050D151K;050D180L;050D181K 050D201K;050D220K;050D221K;050D241K;050D270K 050D271K;050D301K;050D330K;050D331K;050D361K 050D390K;050D391K;050D431K;050D470K;050D471K 050D511K;050D560K;050D561K;050D621K;050D680K 050D681K;050D520K
DVE	40028836	05D180L~05D680K 05D820K~05D471K
CQC	CQC12001076477	05D(180L~751K)
CSA	70147058	05D820K;05D101K; 05D121K;05D151K 05D181K;05D201K;05D221K;05D241K 05D271K;05D301K;05D331K;05D361K 05D391K;05D431K;05D471K

4. PART NUMBERING SYSTEM

VDR □□ D □□□ K □□ □

- VDR: Brand Mark
- □□: Element Diameter
- D: Type:D:Disk,S:Square
- □□□: Varistor Voltage
- K: Tolerance:K±10%，L±15%
- □□:
  - Sapce:Straight foot
  - Short leg NO:□.□
  - CB:Outer bend
  - I:Inner bend
  - K:Small k foot
  - Y:High and low feet
  - J:High Surge
  - PH=Ultra Surge
  - TA:Ammo,TR:Reel
  - 1□=Combinatorial wave
  - 2□=Times
  - T＆G is Horizontal patch
- □:
  - Sapce is 85℃
  - " H"is 125℃

4.1.New Coding Rules

New Coding Rules for Varistors

Sapce:is Straight foot＆85℃	空白表示标准直接及85度
“H”is 125℃	H:代表高温粉125度
Short leg:NO:□.□	K后数值表剪短角长度±0.5
U:+10/-0	K后U：表示电压值+10/-0
D:-10/+0	K后D：表示电压值-10/+0
M:+5/-5	K后M：表示电压值+5/-5
CB:Outer bend	CB:表示内弯脚
I:Inner bend	I:表示内弯脚
Y:High and low feet	Y:前后弯脚
J:High Surge	J:表示高焦耳（J2或J3依表定）
PH=Ultra Surge	PH:表示超高能
1□=Combinatorial wave	BC 2/1 DC 3/1.5 EC 4/2 SC 6/3
2□=Times	YC 10/5 C:代表40次
－G :is Horizontal patch	－G表示卧式贴片加窄带卷装
－L:Horizontal plug-in	－L表示卧式插件散装
－TA:Ammo,-TR:Reel	－TA表示盒装-TR表示卷装
－T1 T2 T3 T4 is bushing	－T1透明-T2黑色-T3蓝色带脚-T4蓝色
－TA:Ammo,-TR:Reel	－TA表盒装-TR表示卷装

5. MECHANICAL CHARACTERISTICS

Dimensions

S Type(Straight Lead)

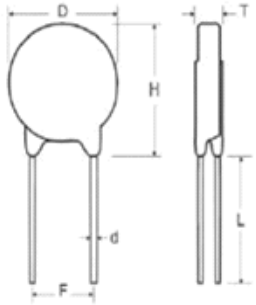

I Type(Inner Crimped Lead)

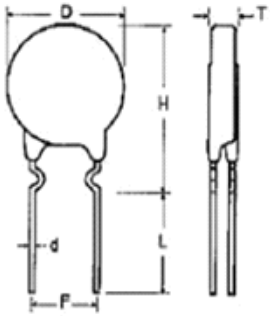

C Type(Out Crimped Lead)

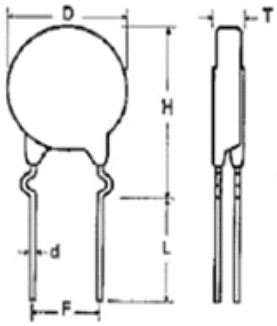

Y Lead Type(Y Kink Lead)

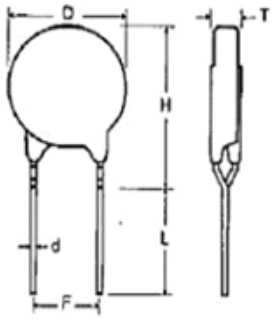

Unit: mm

Part No.	Part No.	T Max.	D Max.	H Max.		L min.	F ±0.8	d ± 0.05
				S	I / C / Y			
VDR-05D180L	VDR-05D180LJ	4.5	7.5	10.5	13.0	20.0	5.0	0.6
VDR-05D220K	VDR-05D220KJ	4.6	7.5	10.5	13.0	20.0	5.0	0.6
VDR-05D270K	VDR-05D270KJ	4.7	7.5	10.5	13.0	20.0	5.0	0.6
VDR-05D330K	VDR-05D330KJ	4.9	7.5	10.5	13.0	20.0	5.0	0.6
VDR-05D390K	VDR-05D390KJ	4.8	7.5	10.5	13.0	20.0	5.0	0.6
VDR-05D470K	VDR-05D470KJ	4.9	7.5	10.5	13.0	20.0	5.0	0.6
VDR-05D560K	VDR-05D560KJ	5.0	7.5	10.5	13.0	20.0	5.0	0.6
VDR-05D680K	VDR-05D680KJ	5.2	7.5	10.5	13.0	20.0	5.0	0.6
VDR-05D820K	VDR-05D820KJ	4.1	7.5	10.5	13.0	20.0	5.0	0.6
VDR-05D101K	VDR-05D101KJ	4.3	7.5	10.5	13.0	20.0	5.0	0.6
VDR-05D121K	VDR-05D121KJ	4.5	7.5	10.5	13.0	20.0	5.0	0.6
VDR-05D151K	VDR-05D151KJ	4.8	7.5	10.5	13.0	20.0	5.0	0.6
VDR-05D181K	VDR-05D181KJ	4.3	7.5	10.5	13.0	20.0	5.0	0.6
VDR-05D201K	VDR-05D201KJ	4.4	7.5	10.5	13.0	20.0	5.0	0.6
VDR-05D221K	VDR-05D221KJ	4.5	7.5	10.5	13.0	20.0	5.0	0.6
VDR-05D241K	VDR-05D241KJ	4.6	7.5	10.5	13.0	20.0	5.0	0.6
VDR-05D271K	VDR-05D271KJ	4.9	7.5	10.5	13.0	20.0	5.0	0.6
VDR-05D301K	VDR-05D301KJ	5.0	7.5	10.5	13.0	20.0	5.0	0.6
VDR-05D331K	VDR-05D331KJ	5.1	7.5	10.5	13.0	20.0	5.0	0.6
VDR-05D361K	VDR-05D361KJ	5.2	7.5	10.5	13.0	20.0	5.0	0.6
VDR-05D391K	VDR-05D391KJ	5.4	7.5	10.5	13.0	20.0	5.0	0.6
VDR-05D431K	VDR-05D431KJ	5.7	7.5	10.5	13.0	20.0	5.0	0.6
VDR-05D471K	VDR-05D471KJ	6.0	7.5	10.5	13.0	20.0	5.0	0.6
VDR-05D511K	VDR-05D511KJ	6.2	7.5	10.5	13.0	20.0	5.0	0.6
VDR-05D561K	VDR-05D561KJ	6.5	7.5	10.5	13.0	20.0	5.0	0.6
VDR-05D621K	VDR-05D621KJ	6.5	7.5	10.5	13.0	20.0	5.0	0.6
VDR-05D681K	VDR-05D681KJ	6.8	7.5	10.5	13.0	20.0	5.0	0.6
VDR-05D751K	VDR-05D751KJ	6.9	7.5	10.5	13.0	20.0	5.0	0.6

5.1 General Characteristics Definition

*Operating Temperature: (-40 ℃ ~+85 ℃)
*Storage Temperature: (-40 ^{o}C ~ +125 ^{o}C)
*Working Surface Temperature: +115 ^{o}C
*Insulation Resistance: > 100M Ω
*Coating (Epoxy Resin): Flame-Retardant to UL 94 V-0

5.2 Material

*Coating: Epoxy Resin
*Lead Wire: The Copper Wire
*Electrode: Silver Solder
*Disk: Zinc Oxide

Marking & Dimensions

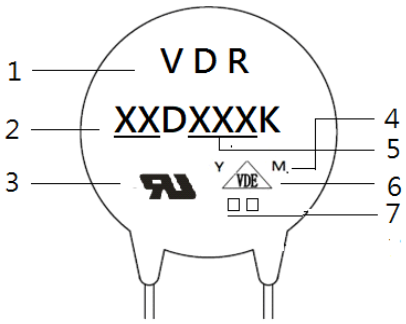

1.Varistor
2.Disk Size
3.CUL Accreditaion Loge
4."Y"&"M" Product Line Code
5.Varistor Voltage
6.VDE Accreditation Loge
7."J" is Hige Surge Code, not "J" is standard Surge
"H" is High temperature range ,not "H" is standard

Reliability Test

Mechanical Ratings

Test Parameter	Test Condition / Description			Performance Requirements
Terminal Pull Strength	After gradually applying the load specified below and keeping the unit fixed for ten seconds, the terminal shall be visually examined for any damage.	Diameter	Loading	No visible damage
		0.6mm	1.0 Kg	
		0.8mm	1.0 Kg	
		1.0mm	2.0 Kg	
Terminal Bending Strength	The unit shall be secured with its terminal kept vertical and the weight specified below be applied in the axial direction. The terminal shall gradually be bent by 90° in one direction, then 90° in the opposite direction, and again back to the original position. The damage of the terminal shall be visually examined.	Diameter	Loading	No visible damage
		0.6mm	0.5 Kg	
		0.8mm	0.5 Kg	
		1.0mm	1.0 Kg	
Vibration	The Specimen shall be vibrated by its lead wires with a total amplitude of 1.5㎜ and a varying frequency of 10~55~10HZ(each minutes) for a period of 2 hours respectively in each X,Yand Z directions.			No visible damage △VB/VB%≦±5%
Soldering-solderability	After dipping the terminal to depth of approximately 3㎜ from the specimen in a soldering bath of 260℃ for 10±1(D5: 5±1) seconds. Thereafter the terminal shall be visually examined.			Terminations shall be uniformly tinned
Soldering- Resistance to Solder Heat	After preheating the specimen, the specimen shall be completely immersed into a soldering bath having a temperature of 260±5℃ for 10±1 (D5: 5±1) seconds or iron of 400±5℃ for 3±0.5 seconds. There after the change of Vb and mechanical damage shall be examined.			No visible damage △VB/VB%≦±5%

ENVIRONMENTAL RATINGS

Dry Heat Loading	The specimen shall be applied continuously the maximum allowable voltage at the specified conditions for specified period and then stored at room temperature and normal humidity over 2 hours. Thereafter, the change of Vb and mechanical damage shall be examined. Ambient temp：125±2℃ ; Period：1000±24hours.				△VB/VB%≦±10%
High Temperature Storage	In a drying oven without load. Ambient temp：125±2℃ ; period：1000±24hours				△VB/VB%≦±5%
Damp Heat Loading	The specimen shall be applied continuously the maximum allowable voltage at the specified conditions for specified period and then stored at room temperature and normal humidity over 2 hours. Thereafter, the change of Vb and mechanical damage shall be examined. Ambient condition：40±2℃ , 90 to 95%R.H. ; period：1000±24 hours				△VB/VB%≦±10%
Temperature Cycle	Condition the specimen to each temperature form step 1 to step 4 in this order for the period shown in the table of specifications. The change of Vb and mechanical damage shall be examined after 2 hours.	Step	Temp°C	Period	No visible damage △VB/VB%≦±10%
		1	-40±3°C	30 min.	
		2	Room Temp	15 min.	
		3	85±2°C	30 min.	
		4	Room Temp	15 min.	
Surge Lifetime Rating	The change of Vb shall be measured after the impulse listed below is applied 10,000 times continuously with the interval of ten seconds at room temperature.				No visible damage △VB/VB%≦±10%
Voltage Proof	Voltage：2500VAC Leakage Current≦0.5mA Time：60 Seconds				No Breakdown

6. ELECTRICAL SPECIFICATIONS

Electrical characteristics

Part Number		Maximum Allowable Voltage		Varistor Voltage	Maximum Clamping Voltage		Withstanding Surge Current		Energy 10/1000μS		Rated Powe	Typical Capacitance (Reference)
Standard	High Surge	AC (V)	DC (V)	V0.1mA(V)	IP(A)	VC(V)	I(A) Standard	I(A) High Surge	(J) Standard	(J) High Surge	(W)	@1KHzPF
05D180L	05D180LJ	11	14	18(15.3~20.7)	1	40	100	250	0.4	0.6	0.01	1400
05D220K	05D220KJ	14	18	22(19.8~24.2)	1	48	100	250	0.5	0.7	0.01	1150
05D270K	05D270KJ	17	22	27(24.3-29.7)	1	60	100	250	0.6	0.9	0.01	930
05D330K	05D330KJ	20	26	33(29.7~36.3)	1	73	100	250	0.8	1.1	0.01	760
05D390K	05D390KJ	25	31	39(35.1~42.9)	1	80	100	250	0.9	1.2	0.01	640
05D470K	05D470KJ	30	38	47(42.3~51.7)	1	104	100	250	1.1	1.5	0.01	530
05D560K	05D560KJ	35	45	56(50.4~61.6)	1	123	100	250	1.3	1.8	0.01	450
05D680K	05D680KJ	40	56	68(61.2~74.8)	1	145	100	250	1.6	2.2	0.01	370
05D820K	05D820KJ	50	65	82(73.8~90.2)	5	150	400	800	2.5	4.0	0.1	300
05D101K	05D101KJ	60	85	100(90~110)	5	177	400	800	3.0	4.1	0.1	250
05D121K	05D121KJ	75	100	120(108~132)	5	210	400	800	4.0	4.9	0.1	210
05D151K	05D151KJ	95	125	150(135~165)	5	260	400	800	4.1	6.5	0.1	165
05D181K	05D181KJ	115	150	180(162~198)	5	320	400	800	4.9	7.5	0.1	140
05D201K	05D201KJ	130	170	200(185~225)	5	355	400	800	6.5	8.5	0.1	125
05D221K	05D221KJ	140	180	220(198~242)	5	380	400	800	7.5	9.0	0.1	110
05D241K	05D241KJ	150	200	240(216~264)	5	415	400	800	8.0	10.5	0.1	100
05D271K	05D271KJ	175	225	270(243~297)	5	475	400	800	8.5	11.0	0.1	95
05D301K	05D301KJ	190	250	300(270~330)	5	520	400	800	9.0	12.0	0.1	85
05D331K	05D331KJ	210	275	330(297~363)	5	570	400	800	9.5	13.0	0.1	75
05D361K	05D361KJ	230	300	360(324~396)	5	620	400	800	10.0	16.0	0.1	70
05D391K	05D391KJ	250	320	390(351~429)	5	675	400	800	12.0	17.0	0.1	65
05D431K	05D431KJ	275	350	430(387~473)	5	745	400	800	13.0	20.0	0.1	60
05D471K	05D471KJ	300	385	470(423~517)	5	810	400	800	15.0	21.0	0.1	55
05D511K	05D511KJ	320	415	510(459~561)	5	845	400	800	16.0	22.5	0.1	50
05D561K	05D561KJ	350	460	560(504~616)	5	920	400	800	16.5	24.0	0.1	45
05D621K	05D621KJ	385	505	620(558~682)	5	1025	400	800	21.0	25.0	0.1	40
05D681K	05D681KJ	420	560	680(612~748)	5	1120	400	800	22.0	29.0	0.1	35
05D751K	05D751KJ	460	615	750(675~825)	5	1240	400	800	22.4	32.0	0.1	30

05D511K to 05D751K does not have VDE certification

7. SOLDERING PARAMETERS

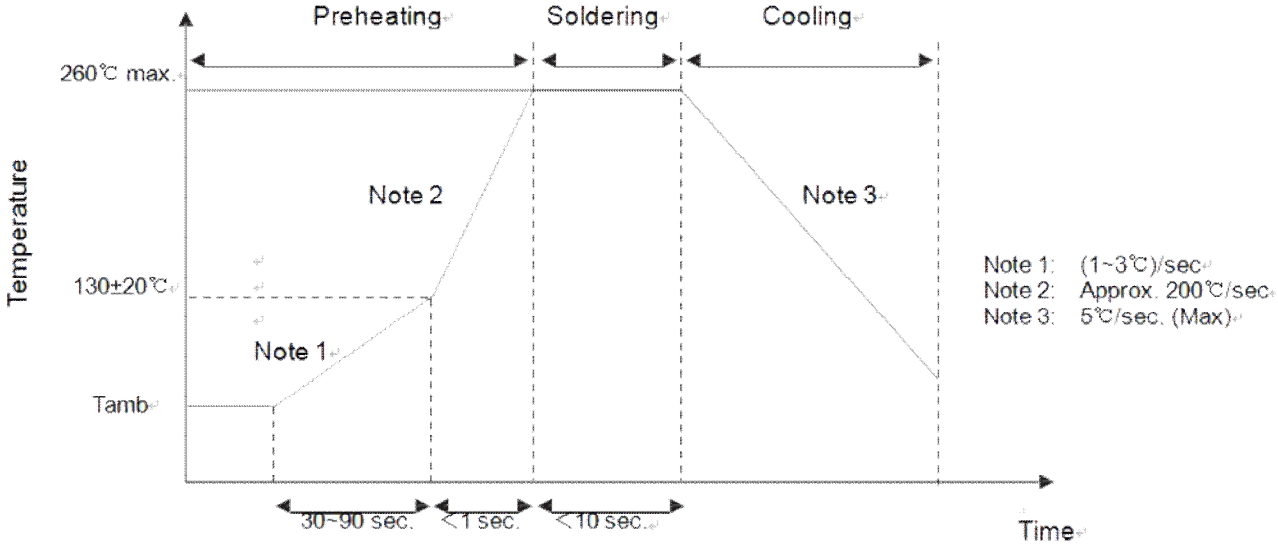

260℃ < 10s(Wave Soldering)

Soldering Peak: 260℃ -10sec Max.(IEC 60068-20)

8. ORDERING INFORMATION

The following information are necessary in order to place your order with us correctly:

Series No.	Amp Code	Packaging Code	Quantity	Purchase Order No.
05D				

9. PACKING INFORMATION

Taping detail

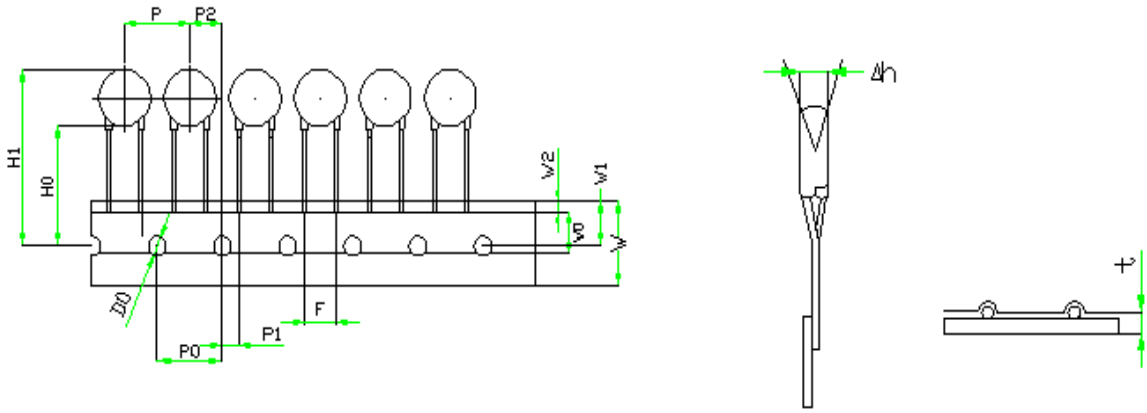

Symbol	P	P0	P1	P2	F	W	W0	W1
05D	12.7±1.0	12.7±0.3	3.85±0.5	6.35±1.3	5.0±0.8	18.0±0.8	8±1.0	9.0±0.5
Symbol	**W2**	**H0**		**H1**	**△h**		**D0**	**t**
05D	3.0max.	20.0±2.0		29.0max.	0±0.5		4.0±0.2	0.6±0.3

Reel Box

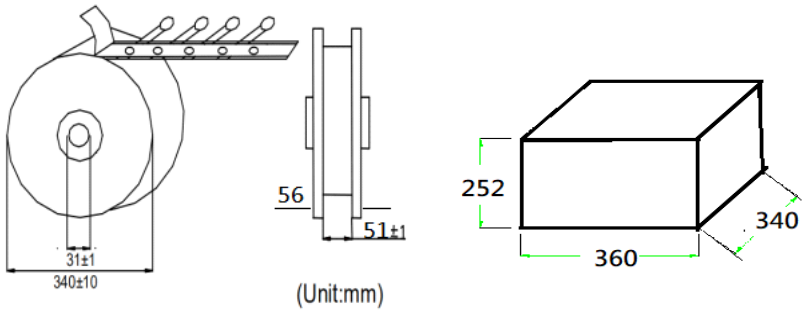

Disc Size/mm	pcs/reel
Φ 05(180K～271K)	2000
Φ 05(331K～561K)	1500
Φ 05(621K～751K)	1000

4 Reels/ Carton

Ammo Box

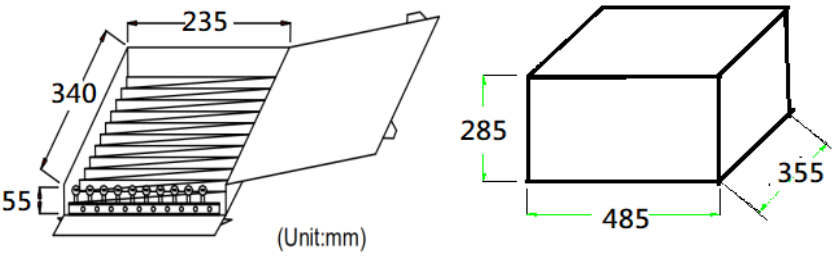

Disc Size/mm	pcs/ box
Φ 05(180K～331K)	1500
Φ 05(391K～751K)	1000

10 Boxs/Carton

Packaging specification / bulk packaging quantity

Unit:Pcs

Dimension	Part No.	Bag	Small Carton	Carton
05D	180L to 751K	1,000	10,000	20,000
05D (Short leg)	180L to 751K	1,000	15,000	30,000

10. APPENDIX

UL Product iQ™ 搜索 我的搜索 我的标签 HAPPY

仪表板 / 搜索 / SURGE-PROTECTIVE DEVICES - COMPONENT | UL Product iQ

VZCA2.E317616 - SURGE-PROTECTIVE DEVICES - COMPONENT

详情
File No.: E317616
UL Category (CCN): VZ
文件类型: Listing

资源
UL Confirmation Letter
Guide Info (VZCA2)

文件 公司信息

Surge-protective Devices - Component

See General Information for Surge-protective Devices - Component

CERGLASS MFG INC
450 Zhongzhen 3Rd Rd
Yingge District
New Taipei, 239 TAIWAN

E317616

Cat No.	SPD Type	Volts (V)	AC/DC/ DC PV	PH	AMPS (A)	AMB (°C)Min	AMB (°C)Max	MODE	VPR (Vpk)	MLV (Vpk)	MCOV (V)	Vn (Vdc)	In (kA)	SCCR (kA)	NOTES
05D															
05D101K	5	60	AC	1	n/a	-40	85	Ld-Ld	-	225	60	100	0.1	n/a	1, 5a
05D121K	5	75	AC	1	n/a	-40	85	Ld-Ld	-	270	75	120	0.1	n/a	1, 5a
05D151K	5	95	AC	1	n/a	-40	85	Ld-Ld	-	315	95	150	0.1	n/a	1, 5a
05D180L	5	10	AC	1	n/a	-40	85	Ld-Ld	-	60	11	18	0.05	n/a	1, 5a
05D181K	5	115	AC	1	n/a	-40	85	Ld-Ld	-	360	115	180	0.1	n/a	1, 5a
05D201K	5	130	AC	1	n/a	-40	85	Ld-Ld	-	400	130	200	0.15	n/a	1, 5a
05D220K	5	14	AC	1	n/a	-40	85	Ld-Ld	-	80	14	22	0.05	n/a	1, 5a
05D221K	5	140	AC	1	n/a	-40	85	Ld-Ld	-	455	140	220	0.15	n/a	1, 5a
05D241K	5	150	AC	1	n/a	-40	85	Ld-Ld	-	510	150	240	0.15	n/a	1, 5a
05D270K	5	17	AC	1	n/a	-40	85	Ld-Ld	-	100	17	27	0.05	n/a	1, 5a
05D271K	5	175	AC	1	n/a	-40	85	Ld-Ld	-	565	175	270	0.15	n/a	1, 5a
05D301K	5	190	AC	1	n/a	-40	85	Ld-Ld	-	620	190	300	0.15	n/a	1, 5a
05D330K	5	20	AC	1	n/a	-40	85	Ld-Ld	-	120	20	33	0.05	n/a	1, 5a
05D331K	5	210	AC	1	n/a	-40	85	Ld-Ld	-	675	210	330	0.15	n/a	1, 5a
05D361K	5	230	AC	1	n/a	-40	85	Ld-Ld	-	730	230	360	0.15	n/a	1, 5a
05D390K	5	25	AC	1	n/a	-40	85	Ld-Ld	-	140	25	39	0.05	n/a	1, 5a
05D391K	5	250	AC	1	n/a	-40	85	Ld-Ld	-	785	250	390	0.15	n/a	1, 5a
05D431K	5	275	AC	1	n/a	-40	85	Ld-Ld	-	840	275	430	0.15	n/a	1, 5a
05D470K	5	30	AC	1	n/a	-40	85	Ld-Ld	-	160	30	47	0.05	n/a	1, 5a
05D471K	5	300	AC	1	n/a	-40	85	Ld-Ld	-	930	300	470	0.15	n/a	1, 5a
05D511K	5	320	AC	1	n/a	-40	85	Ld-Ld	-	1040	320	510	0.15	n/a	1, 5a
05D560K	5	35	AC	1	n/a	-40	85	Ld-Ld	-	180	35	56	0.05	n/a	1, 5a
05D561K	5	350	AC	1	n/a	-40	85	Ld-Ld	-	1150	350	560	0.15	n/a	1, 5a
05D621K	5	385	AC	1	n/a	-40	85	Ld-Ld	-	1260	385	620	0.15	n/a	1, 5a
05D680K	5	40	AC	1	n/a	-40	85	Ld-Ld	-	200	40	68	0.01	n/a	1,5a
05D681K	5	420	AC	1	n/a	-40	85	Ld-Ld	-	1370	420	680	0.15	n/a	1, 5a
05D820K	5	50	AC	1	n/a	-40	85	Ld-Ld	-	180	50	82	0.1	n/a	1, 5a

Notes:

1. Suitable for Factory wiring only.
2. Suitable for Field and Factory wiring.
3. Series External Impedance required, see Electrical Ratings in the Recognition report.
4. Series External Overcurrent Protection required, see Electrical Ratings in the Recognition report.
5. Body of discrete component metal-oxide varistors (MOVs) flammability:
   a) Min. V-0 or VTM-0.
   b) Min. V-1 or VTM-1.
   c) Complies with IEC 60950-1, Edition 2.2, Annex Q/IEC62368-1 Annex G.8.2 needle flame testing requirements.
   d) Complies with IEC 60065, Edition 7.2, Annex G.1.1 needle flame testing requirements.

SPDs investigated for Type 1 applications are automatically suitable for Type 2 applications and may be marked for SPD Type 1 and/or Type 2 applications. SPDs only marked "SPD Type 2" are not suitable for Type 1 applications.

Where a minimum ambient temperature is not specified, assume 0°C unless the product is marked otherwise or with an Outdoor use Environmental Rating. See Electrical Equipment for Use in Ordinary Locations (AALZ) for details regarding Environmental Ratings.

$ - may be followed by one to three any numbers and/or letters

Marking: Company name or tradename "ARJ", "BVR", "DNR", "HWR", "HXR", "JER", "JGR", "JKV", "NDF", "NFC", "SAS", "SLLS", "VCR", "VDR", "VOR" or trademark , , , VOR, , XXVR, , DNR, MOVR, model designation and the Recognized Component Mark, on the product or on the smallest unit container in which the product is packaged.

Last Updated on 2019-09-20

Details - Catalog VDE approved products

Certificate no. 40028836

Back

Product	Varistor
Product group	PTC, NTC and VDR-resistors
Company	Cerglass MFG Inc No. 450 ZhongZhen 3rd Rd., Yingge District 23942 NEW TAIPEI CITY TAIWAN
Certification mark	VDE Registration
VDE Reg-No.	D267
Additional information	Appendix 100A : Type Code Appendix 101A : Type Code Appendix 102A : Type Code Appendix 103A : Type Code Appendix 104A : Type Code Appendix 105A : Type Code Appendix 106A : Type Code Appendix 107A : Type Code Appendix 108A : Type Code Appendix 109A : Type Code Appendix 110A : Type Code Appendix 111A : Type Code
Please note	The picture documentation may show testing labels pending approval by National Certification Bodies and they shall not be affixed to products prior to such an approval.

Standards	IEC 61051-2:1991 IEC 61051-2:1991/AMD1:2009 IEC 61051-2-2:1991 IEC 61051-1:2007

Type	Technical Data
05D180L to 05D680K	
05D820K to 05D471K	
07D180L to 07D680K	
07D820K to 07D561K	
10D180L to 10D680K	
10D201KJ to 10D112KJ	
10D820K to 10D112K	
14D270K to 14D680K	
14D820K to 14D751K	
20D270K to 20D680K	
20D820K to 20D911K	