EC1SAN SERIES

1WATT, UNREGULATED OUTPUT DC-DC CONVERTERS

FEATURES

* Industry Standard SIP/SMD Packages
* Efficiency Up to 83%
* 1500VDC Isolation
* Low Cost
* Unregulated Outputs
* Low Ripple and Noise
* No Tantalum Capacitors Inside

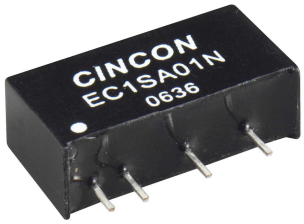

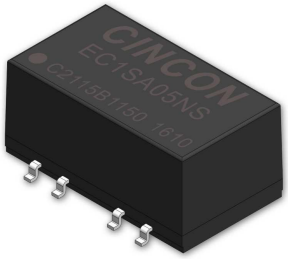

MODEL NUMBER	INPUT VOLTAGE	OUTPUT VOLTAGE	OUTPUT CURRENT	INPUT CURRENT		% EFF.	CAPACITOR LOAD MAX.
				NO LOAD	FULL LOAD		
EC1SA01N	5 VDC	5 VDC	200 mA	40 mA	253 mA	79	220uF
EC1SA02N	5 VDC	12 VDC	84 mA	40 mA	255 mA	79	220uF
EC1SA03N	5 VDC	15 VDC	67 mA	40 mA	254 mA	79	220uF
EC1SA04N	5 VDC	±12 VDC	42 mA	40 mA	258 mA	78	100uF
EC1SA05N	5 VDC	±15 VDC	33 mA	40 mA	254 mA	78	100uF
EC1SA06N	5 VDC	±5 VDC	100 mA	40 mA	270 mA	74	100uF
EC1SA11N	12 VDC	5 VDC	200 mA	15 mA	104 mA	80	220uF
EC1SA12N	12 VDC	12 VDC	84 mA	15 mA	104 mA	81	220uF
EC1SA13N	12 VDC	15 VDC	67 mA	15 mA	103 mA	81	220uF
EC1SA14N	12 VDC	±12 VDC	42 mA	15 mA	105 mA	80	100uF
EC1SA15N	12 VDC	±15 VDC	33 mA	15 mA	102 mA	81	100uF
EC1SA16N	12 VDC	±5 VDC	100 mA	15 mA	108 mA	77	100uF
EC1SA21N	24 VDC	5 VDC	200 mA	7 mA	52 mA	80	220uF
EC1SA22N	24 VDC	12 VDC	84 mA	7 mA	51 mA	83	220uF
EC1SA23N	24 VDC	15 VDC	67 mA	7 mA	52 mA	81	220uF
EC1SA24N	24 VDC	±12 VDC	42 mA	7 mA	52 mA	81	100uF
EC1SA25N	24 VDC	±15 VDC	33 mA	7 mA	50 mA	82	100uF
EC1SA26N	24 VDC	±5 VDC	100 mA	7 mA	53 mA	79	100uF

NOTE: 1. Nominal Input Voltage 5, 12 or 24VDC

SPECIFICATIONS

All Specifications Typical At Nominal Line, Full Load, and 25℃ Unless Otherwise Noted

INPUT SPECIFICATIONS :

Input Voltage Range ..... ±10%
Input Surge Voltage (100ms max.) ..... 5V ..... 9Vdc max.
12V ..... 18Vdc max.
24V ..... 30Vdc max.
Input Filter ..... Capacitive

OUTPUT SPECIFICATIONS :

Voltage Accuracy ..... ±3.0% max.
Voltage Balance (Dual) .....±1.0% max.
Ripple & Noise, 20MHz BW ..... SIP Models ..... 75mV pk-pk max.
SMD Models ..... 120mV pk-pk max.
Temperature Coefficient ..... ±0.05%/℃
Short Circuit Protection ..... Momentary 1sec. max.
Line Regulation (note1) ..... ±1.2% max.
Load Regulation (note2) ..... ±10% max.

NOTE:

1. Line regulation is per 1.0% change in input voltage.
2. Load regulation is for load change from 100% to 20%.
3. The output noise is measured with 0.33uF ceramic capacitor.
4. Suffix "S" to the model number with SMD packages, 5&12Vin models only.
5. Maximum case temperature under any operating condition should not be exceeded 100℃.
6. The EC1SA2XN input terminal need to parallel with 4.7uF ceramic capacitor.

GENERAL SPECIFICATIONS:

Efficiency ..... See Table
Isolation Voltage ..... 1500 VDC min.
Isolation Resistance ..... 10^9 ohm min.
Isolation Capacitance ..... 10pF typ.
Switching Frequency ..... 100KHz typ.
24Vin ..... 75KHz typ.
Operating Ambient Temperature Range ..... -40℃ to +85℃

De-rating, Above 85℃ ..... Linearly to Zero power at 100℃
Case temperature (note5) .....+100℃ max.
Cooling ..... Natural Convection
Storage Temperature Range ..... -55℃ to +125℃
Humidity ..... 95% RH max. Non condensing
MTBF ..... MIL-HDBK-217F, GB ..... 1.5Mhrs min.

Lead-Free Reflow Solder Process (SMD Models) ..... Meet J-STD-020D.1

Dimensions:
SIP Models ..... 0.77x0.24x0.40 inches(19.5x6.1x10.2 mm)
SIP Models(24Vin) ..... 0.77x0.28 x0.40 inches(19.5x7.2x10.2 mm)
SMD Models(Single) ..... 0.54×0.36×0.29 Inches (13.7×9.2×7.4 mm)
SMD Models(Dual) ..... 0.64×0.36×0.29 Inches (16.2×9.2×7.4 mm)
Case Material ..... Non-conductive black plastic
Weight ..... 24Vin 2.7g
Others 1.8g
SMD Tpye 1.4g

CASE Miniature:

All Dimensions In Inches(mm)

Tolerance	Inches	Millimeters
	X.XX±0.01	X.X±0.25
	X.XXX±0.005	X.XX±0.13
Pin	±0.002	±0.05

SIP PACKAGES

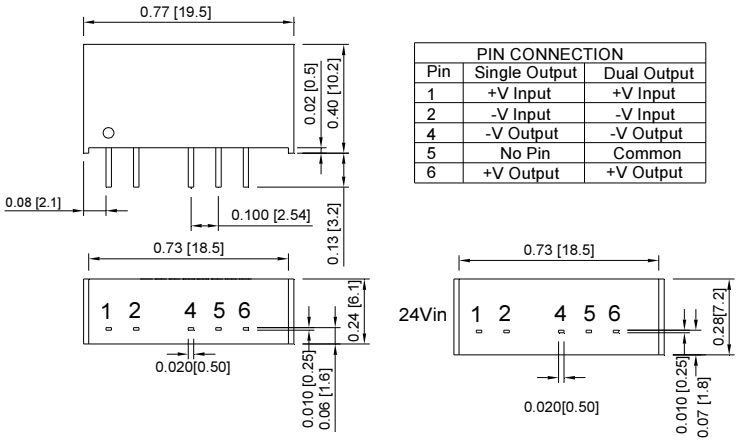

PIN CONNECTION		
Pin	Single Output	Dual Output
1	+V Input	+V Input
2	-V Input	-V Input
4	-V Output	-V Output
5	No Pin	Common
6	+V Output	+V Output

Typical Derating curve for Natural Convection

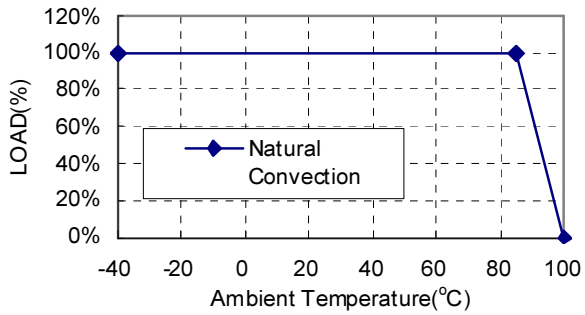

SMD PACKAGES

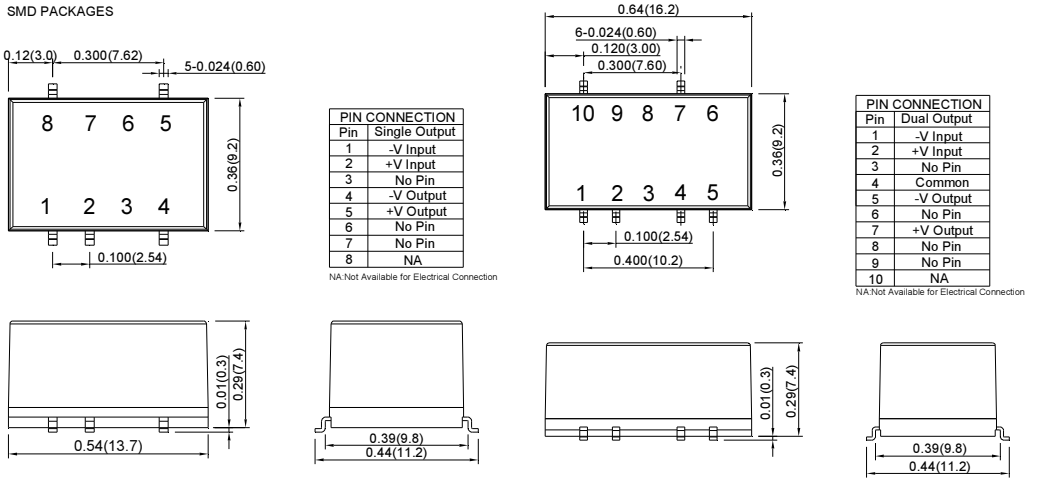

PIN CONNECTION	
Pin	Single Output
1	-V Input
2	+V Input
3	No Pin
4	-V Output
5	+V Output
6	No Pin
7	No Pin
8	NA

NA:Not Available for Electrical Connection

PIN CONNECTION	
Pin	Dual Output
1	-V Input
2	+V Input
3	No Pin
4	Common
5	-V Output
6	No Pin
7	+V Output
8	No Pin
9	No Pin
10	NA

NA:Not Available for Electrical Connection