COOLTRON

PRODUCT SPECIFICATION SHEET

CUSTOMER:	
CUSTOMER MODEL NO.:	
COOLTRON MODEL NO.:	FD1238B24W7-64A-2R
DESCRIPTION:	DC Fan, 120x120x38mm, 24VDC,
	6000RPM, Dual Ball Bearing
	No Connector.
EDITION:	A01
ISSUE DATE:	4/26/2023

Products will meet the specifications stated on this data sheet for all future production orders unless a revision has been approved by both parties.

COOLTRON Industrial Supply, Inc.

19929 Harrison Ave., Industry, CA 91789 Tel: 909-598-6033 Fax: 909-598-6043 www.cooltron.com

Standards and Specifications
of
Model: FD1238B24W7-64A-2R
(Auto Restart Protection)

RoHS Compliance

A. General Specification

Item		Specification / Standard / Condition	
01	Outline Dimension	120 x 120 x 38 mm	
02	Bearing	Dual Ball Bearing	
03	Rated Voltage	DC 24 V	
04	Operating Voltage	DC 12 V ~ DC 24 V	
05	Starting Voltage	DC 12 V	1. 25°C, 2. 65% RH
06	Rated Current (Max.)	/ A	
07	Actual Current	0.9 A	
08	Power Consumption	21.6 W(Max.:/W)	
09	Rated Speed	6000 R.P.M. ± 10%	1. Free Air 2. Rated Voltage 3. 25°C, 65% RH 4. After 10 Min. Rotating.
10	Maximum Airflow	196 CFM	1. Rated Voltage 2. AMCA Standard 3. Rated Speed
11	Maximum Static Pressure	27.1 mm-H_2O	
12	Noise Level	63.3 dB (A)	1. Rated Voltage 2. Measured in a Non-Echo Chamber 3. ISO 3745 Test Condition
13	Life Expectancy	70,000 Hrs. at 40°C	1. L10 at Conf. Level 90%, 2. Rated Voltage
14	Net Weight	/ Gram	
15	Number of Blade	7 Blades	
16	Number of Pole	4 Poles	
17	Rotating Direction	Counter-Clockwise	Looking at Rotor Side
18	Plastic Material: Housing, Blade	Housing: Plastic UL 94V-0 P.B.T. Blade: Plastic UL 94V-0 P.B.T.	
19	Lead Wire	UL Type #24 AWG	Red: (+) Black: (-)
20	Connector	Without	
21	Special Function	Auto Restart	

B. Electrical Specification

Item		Specification / Condition	
01	Locked Rotor Protection	√	Safety Condition
		√	a. Auto power off after locked at rated voltage for 1 sec. b. After auto power off, circuit attempt to restart in 2-6 sec.
02	Polarity Protection	√	a. Circuit is protected when VCC & GND are exchanged, b. The circuit won't be burned within 5 seconds.
03	Insulation Resistance	√	10 m.Ohm / between unshielded wire and frame at 500 VDC/min.
04	Dielectric Strength	√	5 mA Maximum. / Measured between lead wire (+) and frame at 500 VAC/min.

C. Environmental Specification

Item		Specification / Condition
01	Operating Condition	Temperature: -10ºC ~ + 70ºC Humidity: 15% ~ 90% RH
02	Storage Temperature	Temperature: -40ºC ~ +85ºC Humidity: 15% ~ 90% RH
03	Test of high & low Temperature	Test Circulation at -10ºC & 70ºC two times per 4 hours
04	Packing Vibration Test	Packing condition: X, Y, Z 3 directions, 1.1G load vibration test for 30 min.
05	Packing Shock Proof Test	1 corner, 3 edges, 6 faces natural drop from 60cm high, packed

D. Safety Approvals

CE

Safety Approval	File No.
CE	TB10088262

E. Label Marking

01: Fan Label Marking

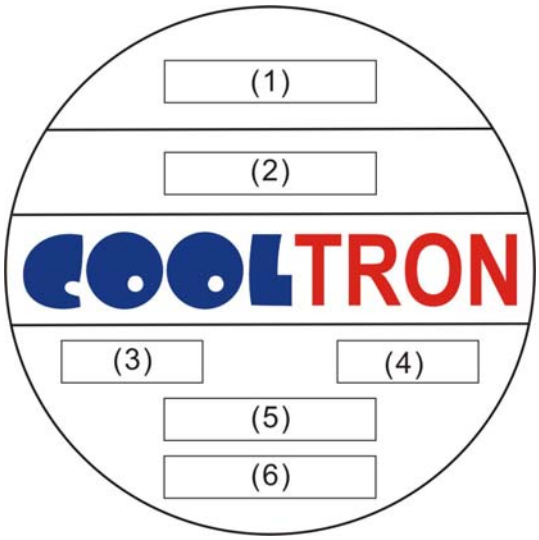

(1)	Safety Approval
(2)	Model Number & Appendix Code
(3)	Rated Voltage
(4)	Power Consumption
(5)	Bearing Type
(6)	Location

02: RoHS Label Marking:

Label	Location
RoHS & Date Code	Fan Outlet Frame

F. FAN PERFORMANCE CUVER

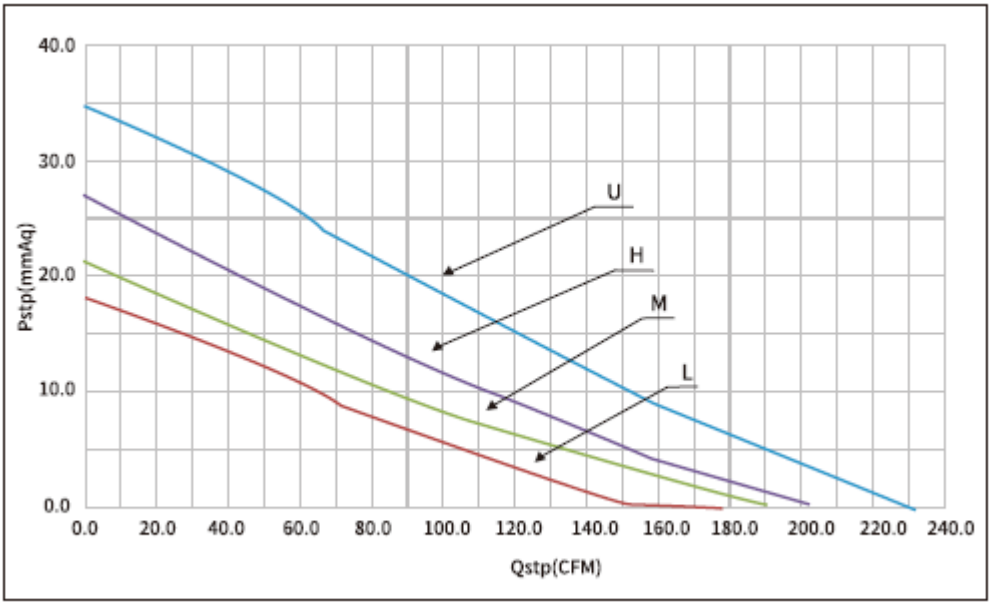

G. FAN DEMENSION DRAWING

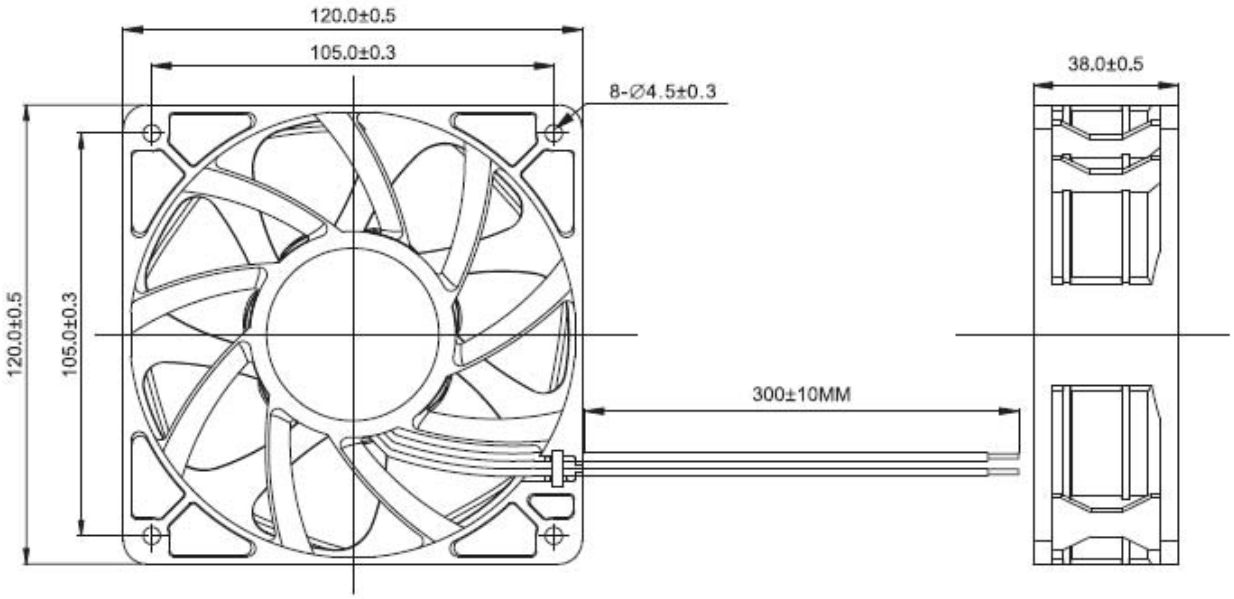

REMARKS

1. COOLTRON will not assume responsibility for the performance of the products if the application conditions fall outside the parameters stated forth in this specification.
2. A written request should be submitted to COOLTRON prior to approval if abnormality and deviation from this specification is required.
3. Please be cautious when fan is being exercised or handled. Damages may be resulted when apply pressure to the impeller or hold the fan by the lead wires or drop the fans to the production platform.
4. With exception of suitability of some particular designs, any failure and problems regarding safety of the product caused by the introduction of powder, droplets of water or encroachment of insert in the hub are not guaranteed.
5. All general specifications and quality values are measured under condition of free air and fan vertical set up. COOLTRON highly suggests practicing a test when fan apply to a special application.
6. COOLTRON fans are not suitable to be used in an environment that contains aggressive or corrosive fluids.
7. Always ensure that fans are stored according to the storage temperatures specified. Do not store in an environment with a high humidity level. If the fans were stored for longer than 6 months, it is highly recommended to apply functional testing before shipping.
8. Except for the feature of the Lock Rotor Protection specifically stated, this feature is not applied to all fans. COOLTRON highly suggests not to stop the impellers of the working fans such interruption will cause adverse effect.
9. During installation, please be cautious. COOLTRON is not responsible for any excess resonance, vibration and subsequent noise caused by incorrect mounting of fans.
10. During testing it is important to consider safety at all times. A suitable guard should be fitted to the fan to prevent personal injury.
11. All test environments are conducted under the condition of relative (ambient) temperature and humidity at 25℃, 65%RH. The test result stated above is effective only for unique fan performance.
12. The above conditions are examples of extreme application. However they are very important and should receive top priority.