DISPLAYTRONIC

SPECIFICATIONS FOR LIQUID CRYSTAL DISPLAY

ACM2004D SERIES CHARACTER MODULE VER1.2

CUSTOMER APPROVAL			
※ PART NO. : _____			
APPROVAL		COMPANY CHOP	
CUSTOMER COMMENTS			

DISPLAYTRONIC ENGINEERING APPROVAL		
DESIGN BY	CHECKED BY	APPROVED BY

REVISION RECORD

REVISION	REVISION DATE	PAGE	CONTENTS
VER1.1	**15/6-2006**		**MODIFY THE COVER,ADD CONTENT AND REVISION RECORD.**
VER1.2	**7/3-2007**		**ADD PRECAUTION FOR USING LCM** **MODIFY THE 8.0 TIMING CHARACTERISTICS**

※ CONTENTS

1.0 MECHANICAL SPECS

1. Overall Module Size	98.0mm(W) x 60.0mm(H) x max 14.0mm(D) for LED backlight version 98.0mm(W) x 60.0mm(H) x max 9.5mm(D) for reflective version
2. Dot Size	0.55mm(W) x 0.55mm(H)
3. Dot Pitch	0.60mm(W) x 0.60mm(H)
4. Duty	1/16
5. Controller IC	KS0066
6. LC Fluid Options	TN, STN
7. Polarizer Options	Reflective, Transflective, Transmissive
8. Backlight Options	LED
9. Temperature Range Options	Standard(0ºC ~ 50ºC), Wide(-20ºC ~ 70ºC)

2.0 ABSOLUTE MAXIMUM RATINGS

Item	Symbol	Min	Typ	Max	Unit
Operating temperature (Standard)	Top	0	-	50	ºC
Storage temperature (Standard)	Tst	-10	-	60	ºC
Operating temperature (Wide temperature)	Top	-20	-	70	ºC
Storage temperature (Wide temperature)	Tst	-30	-	80	ºC
Input voltage	Vin	Vss		Vdd	V
Supply voltage for logic	Vdd- Vss	2.7	-	5.5	V
Supply voltage for LCD drive	Vdd- Vo	-3.0	-	13.0	V

3.0 ELECTRICAL CHARACTERISTICS

Item	Symbol	Condition	Min	Typ	Max	Unit
Input voltage (high)	Vih	H level	2.2	-	Vdd	V
Input voltage (low)	Vil	L level	0	-	0.6	V
Recommended LC Driving Voltage (Standard Temp)	Vdd - Vo	0ºC	-	4.8	5.4	V
		25ºC	4.2	4.6	-	
		50ºC	3.9	4.3	-	
Recommended LC Driving Voltage (Wide Temp)	Vdd -Vo	-20ºC	-	6.4	7.2	V
		0ºC	-	4.8	-	
		50ºC	-	4.3	-	
		70ºC	3.7	4.2	-	
Power Supply Current	Idd	Vdd=5.0V, fosc=270kHz	-	0.5	1.0	mA
LED Power Supply Voltage	VBL+	R8=6.8Ω	-	5.0	8.5	V
LED Power Supply Current	Ifled	R8=6.8Ω	-	120	600	mA

4.0 OPTICAL CHARACTERISTICS (Ta=25ºC, Vdd= 5.0V±0.25V, TN LC fluid)

Item	Symbol	Condition	Min	Typ	Max	Unit
Viewing angle (horizontal)	θ	Cr ≥ 4.0	-25	-	-	deg
Viewing angle (vertical)	ϕ	Cr ≥ 4.0	-30	-	30	deg
Contrast Ratio	Cr	ϕ=0°, θ=0°	-	2	-	
Response time (rise)	Tr	ϕ=0°, θ=0°	-	120	150	ms
Response time (fall)	Tf	ϕ=0°, θ=0°	-	120	150	ms

4.1 OPTICAL CHARACTERISTICS (Ta=25ºC, Vdd= 5.0V±0.25V, STN LC fluid)

Item	Symbol	Condition	Min	Typ	Max	Unit
Viewing angle (horizontal)	θ	Cr ≥ 2.0	-60	-	35	deg
Viewing angle (vertical)	ϕ	Cr ≥ 2.0	-40	-	40	deg
Contrast Ratio	Cr	ϕ=0°, θ=0°	-	6	-	
Response time (rise)	Tr	ϕ=0°, θ=0°	-	150	250	ms
Response time (fall)	Tf	ϕ=0°, θ=0°	-	150	250	ms

5.0 BLOCK DIAGRAM

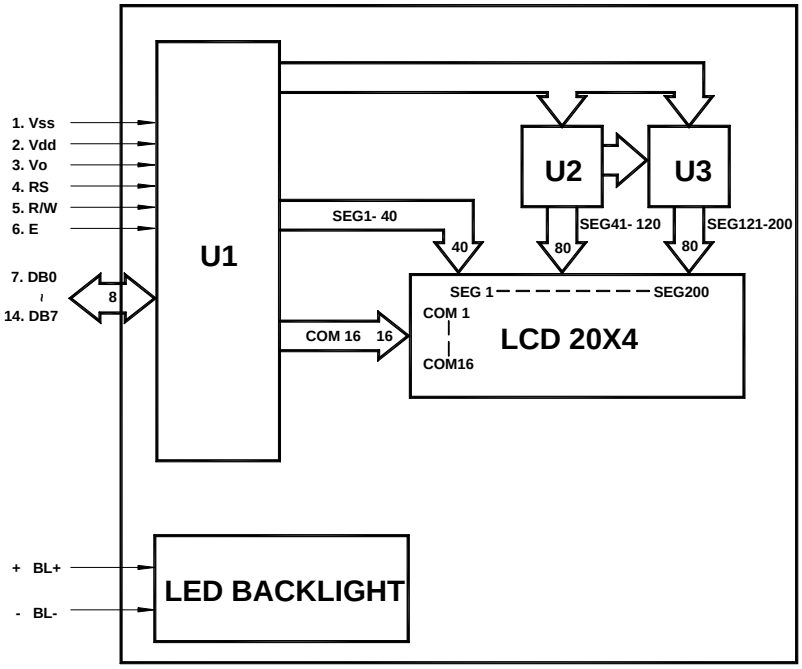

6.0 PIN ASSIGNMENT

Pin No.	Symbol	Function
1	Vss	Ground
2	Vdd	+5V
3	Vo	LCD contrast adjust
4	RS	Register select
5	R/W	Read / write
6	E	Enable
7	DB0	Data bit 0
8	DB1	Data bit 1
9	DB2	Data bit 2
10	DB3	Data bit 3
11	DB4	Data bit 4
12	DB5	Data bit 5
13	DB6	Data bit 6
14	DB7	Data bit 7
15	BL+	Power Supply for BL+(5.0V)
16	BL-	Power Supply for BL-

7.0 POWER SUPPLY

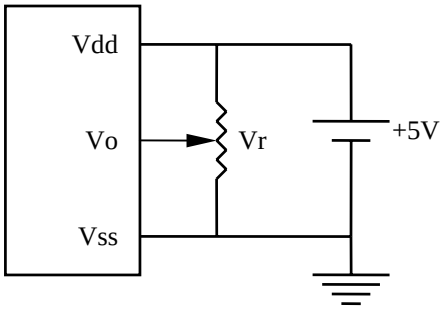

STANDARD TEMP RANGE

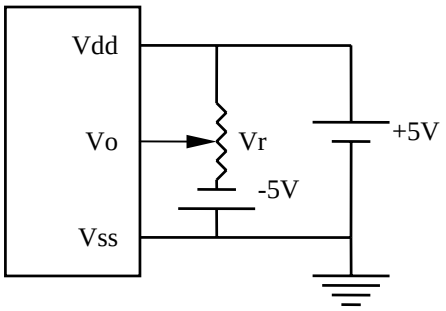

WIDE TEMP RANGE

Vr = 10KΩ ~ 20KΩ

8.0 TIMING CHARACTERISTICS

Item	Symbol	Test Condition	Min.	Typ.	Max.	Unit
Enable cycle time	t_C	Fig. a, Fig. b	500	-	-	ns
Enable pulse width	t_W	Fig. a, Fig. b	230	-	-	ns
Enable rise/fall time	t_R , t_F	Fig. a, Fig. b	-	-	20	ns
RS, R/W set up time	t_{SU}	Fig. a, Fig. b	40	-	-	ns
RS, R/W hold time	t_H	Fig. a, Fig. b	10	-	-	ns
Data delay time	t_D	Fig. b	-	-	120	ns
Data set up time	t_{DSU}	Fig. a	80	-	-	ns
Data hold time	t_{DH}	Fig. a, Fig. b	10	-	-	ns

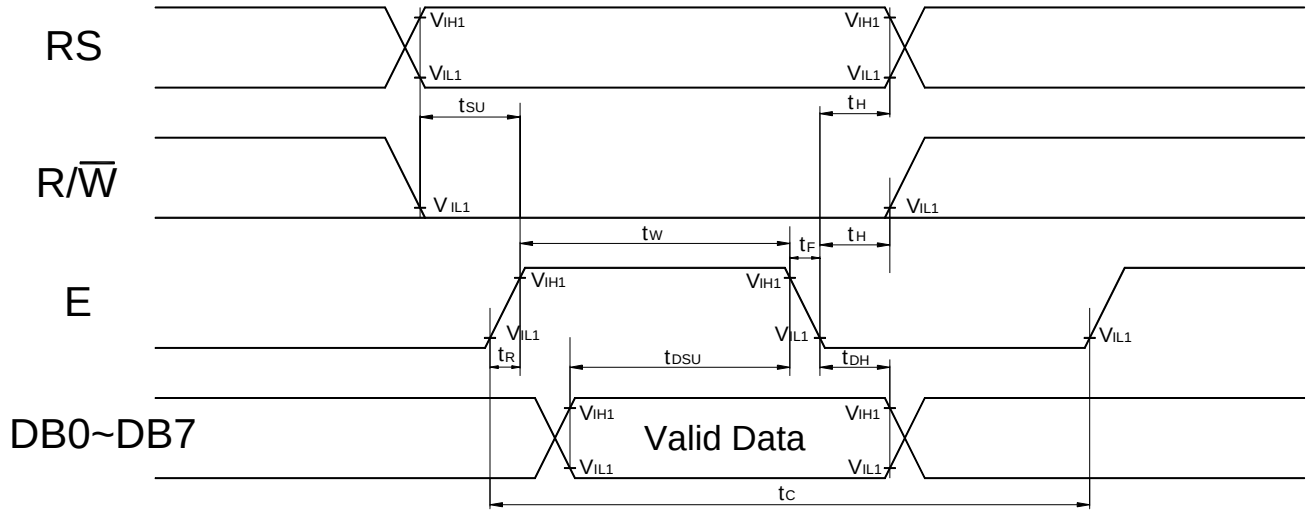

Fig. a Interface timing (data write)

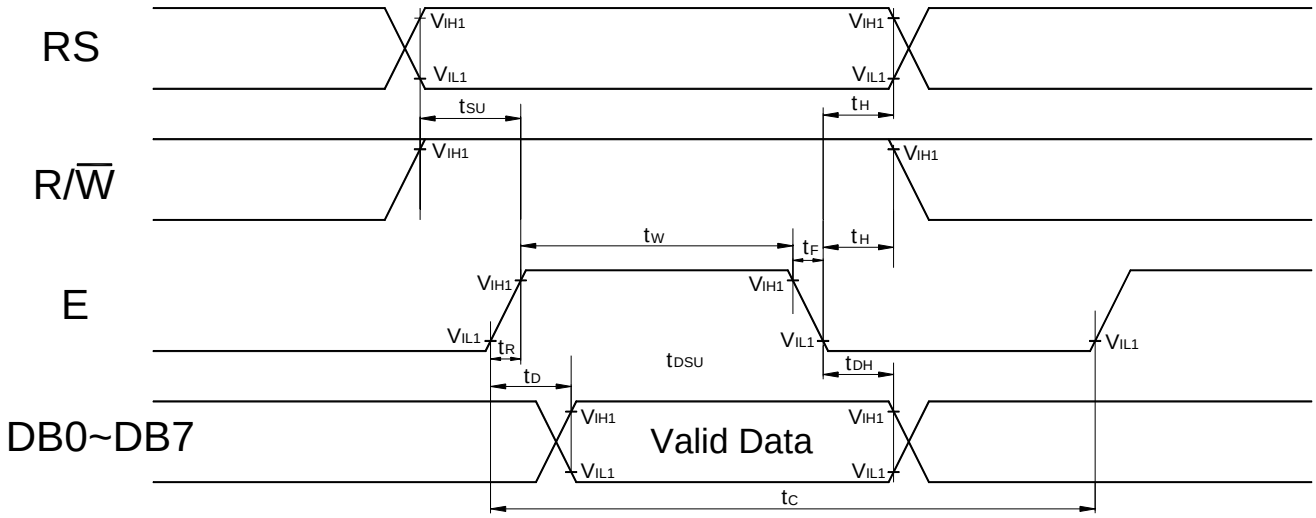

Fig. b Interface timing (data read)

9.0 MECHANICAL DIAGRAM

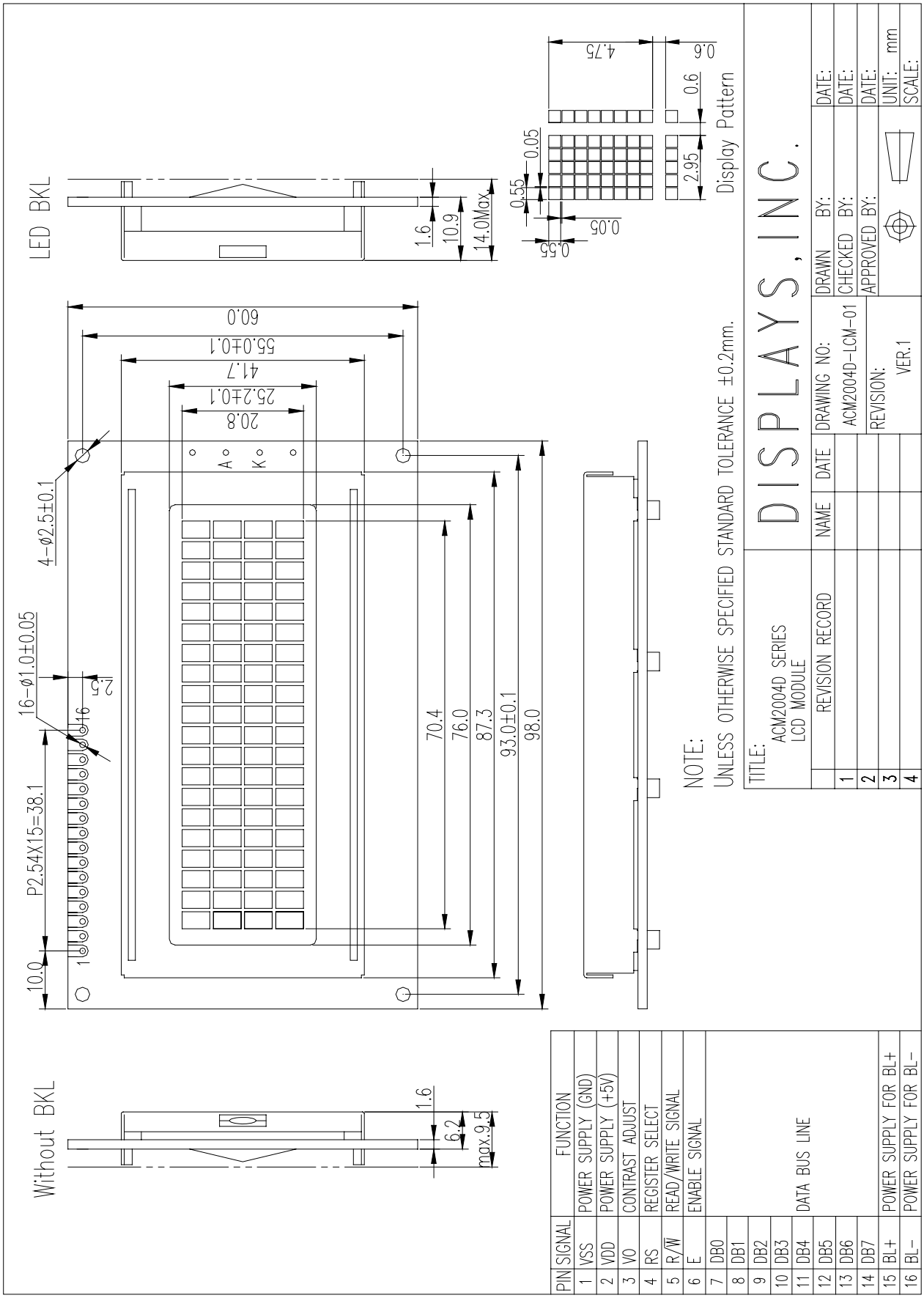

PIN	SIGNAL	FUNCTION
1	VSS	POWER SUPPLY (GND)
2	VDD	POWER SUPPLY (+5V)
3	VO	CONTRAST ADJUST
4	RS	REGISTER SELECT
5	R/$\overline{W}$	READ/WRITE SIGNAL
6	E	ENABLE SIGNAL
7	DB0	DATA BUS LINE
8	DB1	
9	DB2	
10	DB3	
11	DB4	
12	DB5	
13	DB6	
14	DB7	
15	BL+	POWER SUPPLY FOR BL+
16	BL-	POWER SUPPLY FOR BL-

10.0 RELIABILITY TEST

Storage Condition	Content	Evaluations and Assessment*			
		Current Consumption	Oozing	Contrast	Other Appearances
Operation at high temperature and humidity	40ºC,90% RH,240hrs	Twice initial value or less	none	More than 80% of initial value	No abnormality
High temperature storage	60ºC, 240hrs	Twice initial value or less	none	More than 80% of initial value	No abnormality
Low temperature storage	-20ºC, 240hrs	Twice initial value or less		More than 80% of initial value	No abnormality

*Evaluations and assessment to be made two hours after returning to room temperature (25ºC±5ºC).
*The LCDs subjected to the test must not have dew condensation.

11.0 DISPLAY INSTRUCTION TABLE

COMMAND	RS	R/W	DB7	DB6	DB5	DB4	DB3	DB2	DB1	DB0	DESCRIPTION	Executing time fosc=250khz

Clear Display	0	0	0	0	0	0	0	0	0	1	Clears Display & Returns to Address 0.	1.64ms
Cursor at Home	0	0	0	0	0	0	0	0	1	x	Returns Cursor to Address 0. Also returns the display being shifted to the original position. DDRAM contents remain unchanged.	1.64ms
Entry Mode Set	0	0	0	0	0	0	0	1	I/D	S	I/D: Set Cursor Moving Direction I/D=1: Increment I/D=0: Decrement S: Specify Shift of Display S=1: The display is shifted S=0: The display is not shifted	40µs
Display ON/OFF Control	0	0	0	0	0	0	1	D	C	B	Display D=1: Display on D=0: Display off Cursor C=1: Cursor on C=0: Cursor off Brink B=1: Brink on B=0: Brink off	40µs
Cursor / Display Shift	0	0	0	0	0	1	S/C	R/L	x	x	Moves cursor or shifts the display w/o changing DD RAM contents S/C=0: Cursor Shift (RAM unchanged) S/C=1: Display Shift (RAM unchanged) R/L=1: Shift to the Right R/L=0: Shift to the Left	40µs
Function Set	0	0	0	0	1	DL	N	F	x	x	Sets data bus length (DL), # of display lines (N), and character fonts (F). DL=1: 8 bits F=0: 5x7 dots DL=0: 4 bits F=1: 5x10 dots N=0: 1 line display N=1: 2 lines display	40µs
Set CG RAM Address	0	0	0	1	Character Generator (CG) RAM Address						Sets CG RAM address. CG RAM data is sent and received after this instruction.	40µs
Set DD RAM Address	0	0	1	Display Data (DD) RAM Address / Cursor Address							Sets DD RAM address. DD Ram data is sent and received after this instruction.	40µs
Busy Flag / Address Read	0	1	BF	Address counter used for both DD & CG RAM address							Reads Busy Flag (BF) and address counter contents.	40µs
Write Data	1	0	Write Data								Writes data into DDRAM or CGRAM.	46µs
Read Data	1	1	Read Data								Reads data from DDRAM or CGRAM.	46µs

x: Don't Care.

12.0 STANDARD CHARACTER PATTERNS

Lower 4 Bits \ Upper 4 Bits	0000	0001	0010	0011	0100	0101	0110	0111	1000	1001	1010	1011	1100	1101	1110	1111
xxxx0000	CG RAM (1)			0	@	P	`	p				ー	タ	ミ	α	p
xxxx0001	(2)		!	1	A	Q	a	q			。	ア	チ	ム	ä	q
xxxx0010	(3)		"	2	B	R	b	r			「	イ	ツ	メ	ß	θ
xxxx0011	(4)		#	3	C	S	c	s			」	ウ	テ	モ	ε	∞
xxxx0100	(5)		$	4	D	T	d	t			、	エ	ト	ヤ	μ	Ω
xxxx0101	(6)		%	5	E	U	e	u			・	オ	ナ	ユ	σ	ü
xxxx0110	(7)		&	6	F	V	f	v			ヲ	カ	ニ	ヨ	ρ	Σ
xxxx0111	(8)		'	7	G	W	g	w			ァ	キ	ヌ	ラ	g	π
xxxx1000	(1)		(	8	H	X	h	x			ィ	ク	ネ	リ	√	x̄
xxxx1001	(2)		)	9	I	Y	i	y			ゥ	ケ	ノ	ル	⁻¹	y
xxxx1010	(3)		*	:	J	Z	j	z			ェ	コ	ハ	レ	j	千
xxxx1011	(4)		+	;	K	[	k	{			ォ	サ	ヒ	ロ	ˣ	万
xxxx1100	(5)		,	<	L	¥	l	|			ャ	シ	フ	ワ	¢	円
xxxx1101	(6)		−	=	M	]	m	}			ュ	ス	ヘ	ン	£	÷
xxxx1110	(7)		.	>	N	^	n	→			ョ	セ	ホ	゛	ñ	
xxxx1111	(8)		/	?	O	_	o	←			ッ	ソ	マ	゜	ö	▉

Note: The character generator RAM is the RAM with which the user can rewrite character patterns by program.

13.0 PRECAUTION FOR USING LCM

1. When design the product with this LCD Module, make sure the viewing angle matches to its purpose of usage.
2. As LCD panel is made of glass substrate, Dropping the LCD module or banging it against hard objects may cause cracking or fragmentation. Especially at corners and edges.
3. Although the polarizer of this LCD Module has the anti-glare coating, always be careful not to scratch its surface. Use of a plastic cover is recommended to protect the surface of polarizer.
4. If the LCD module is stored at below specified temperature, the LC material may freeze and be deteriorated. If it is stored at above specified temperature, the molecular orientation of the LC material may change to Liquid state and it may not revert to its original state. Excessive temperature and humidity could cause polarizer peel off or bubble. Therefore, the LCD module should always be stored within specified temperature range.
5. Saliva or water droplets must be wiped off immediately as those may leave stains or cause color changes if remained for a long time. Water vapor will cause corrosion of ITO electrodes.
6. If the surface of LCD panel needs to be cleaned, wipe it swiftly with cotton or other soft cloth. If it is not still clean enough, blow a breath on the surface and wipe again.
7. The module should be driven according to the specified ratings to avoid malfunction and permanent damage. Applying DC voltage cause a rapid deterioration of LC material. Make sure to apply alternating waveform by continuous application of the M signal. Especially the power ON/OFF sequence should be kept to avoid latch-up of driver LSIs and DC charge up to LCD panel.
8. Mechanical Considerations
   a) LCM are assembled and adjusted with a high degree of precision. Avoid excessive shocks and do not make any alterations or modifications. The following should be noted.
   b) Do not tamper in any way with the tabs on the metal frame.
   c) Do not modify the PCB by drilling extra holes, changing its outline, moving its components or modifying its pattern.
   d) Do not touch the elastomer connector; especially insert a backlight panel (for example, EL).
   e) When mounting a LCM makes sure that the PCB is not under any stress such as bending or twisting. Elastomer contacts are very delicate and missing pixels could result from slight dislocation of any of the elements.
   f) Avoid pressing on the metal bezel, otherwise the elastomer connector could be deformed and lose contact, resulting in missing pixels.
9. Static Electricity
   a) Operator

Ware the electrostatics shielded clothes because human body may be statically charged if not ware shielded clothes. Never touch any of the conductive parts such as the LSI pads; the copper leads on the PCB and the interface terminals with any parts of the human body.

   b) Equipment

There is a possibility that the static electricity is charged to the equipment, which has a function of peeling or friction action (ex: conveyer, soldering iron, working table). Earth the equipment through proper resistance (electrostatic earth: $1x10^8$ ohm).
Only properly grounded soldering irons should be used.
If an electric screwdriver is used, it should be well grounded and shielded from commutator sparks.
The normal static prevention measures should be observed for work clothes and working benches; for the latter conductive (rubber) mat is recommended.

   c) Floor

Floor is the important part to drain static electricity, which is generated by operators or equipment.

There is a possibility that charged static electricity is not properly drained in case of insulating floor. Set the electrostatic earth (electrostatic earth: $1x10^8$ ohm).

   d) Humidity

Proper humidity helps in reducing the chance of generating electrostatic charges. Humidity should be kept over 50%RH.

   e) Transportation/storage

The storage materials also need to be anti-static treated because there is a possibility that the human body or storage materials such as containers may be statically charged by friction or peeling.

The modules should be kept in antistatic bags or other containers resistant to static for storage.

   f) Soldering

Solder only to the I/O terminals.Use only soldering irons with proper grounding and no leakage.

Soldering temperature : 280° C ± 10° C
Soldering time: 3 to 4 sec.
Use eutectic solder with resin flux fill.
If flux is used, the LCD surface should be covered to avoid flux spatters. Flux residue should be removed afterwards.

g) Others

The laminator (protective film) is attached on the surface of LCD panel to prevent it from scratches or stains. It should be peeled off slowly using static eliminator.

Static eliminator should also be installed to the workbench to prevent LCD module from static charge.

10. Operation
    a) Driving voltage should be kept within specified range; excess voltage shortens display life.
    b) Response time increases with decrease in temperature.
    c) Display may turn black or dark blue at temperatures above its operational range; this is (however not pressing on the viewing area) may cause the segments to appear “fractured”.
    d) Mechanical disturbance during operation (such as pressing on the viewing area) may cause the segments to appear “fractured”.
11. If any fluid leaks out of a damaged glass cell, wash off any human part that comes into contact with soap and water. The toxicity is extremely low but caution should be exercised at all the time.
12. Disassembling the LCD module can cause permanent damage and it should be strictly avoided.
13. LCD retains the display pattern when it is applied for long time (Image retention). To prevent image retention, do not apply the fixed pattern for a long time. Image retention is not a deterioration of LCD. It will be removed after display pattern is changed.
14. Do not use any materials, which emit gas from epoxy resin (hardener for amine) and silicone adhesive agent (dealcohol or deoxym) to prevent discoloration of polarizer due to gas.
15. Avoid the exposure of the module to the direct sunlight or strong ultraviolet light for a long time.

The brightness of LCD module may be affected by the routing of CCFL cables due to leakage to the chassis through coupling effect. The inverter circuit needs to be designed taking the level of leakage current into consideration. Thorough evaluation is needed for LCD module and inverter built into its host equipment to