1N4448

FAST SWITCHING SURFACE MOUNT DIODES	VOLTAGE - **100** Volts POWER - **500** mW

FEATURES

- Fast switching Speed.
- Surface Mount Package Ideally Suited For Automatic Insertion.
- Silicon Epitaxal Planar Construction.
- Lead free in comply with EU RoHS 2011/65/EU directives.

MECHANICAL DATA

- Case : Molded Glass DO-35
- Terminals : Solderable per MIL-STD-750, Method 2026
- Approx. Weight : 0.13 grams
- Ordering information : Suffix : " -35 " to order DO-35 Package

DO-35

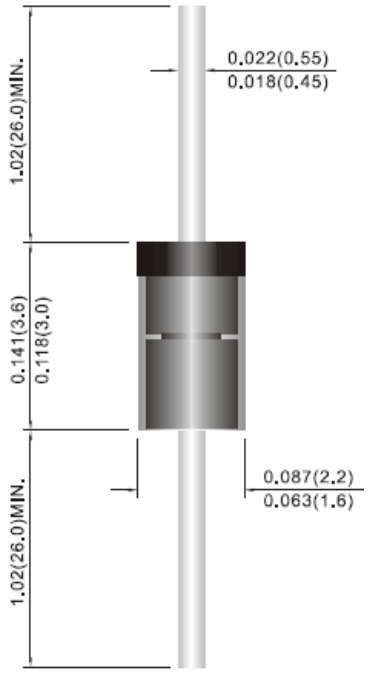

Dimensions in inches and (millimeters)

Absolute Maximum Ratings (Ta = 25℃)

Parameter	Symbol	Value	Unit
Peak Reverse Voltage	V_{RM}	100	V
Maximum DC Blocking Voltage	V_{DC}	75	V
Maximum Average Forward Current TA=25℃ And f≥50Hz	I_{AV}	150	mA
Surge Forward Current (at t <1 s and T_J=25℃)	I_{FSM}	500	mA
Power Dissipation at T_A=25℃	P_{TOT}	500	mW
Maximum Forward Voltage at I_F=100mA	V_F	1	V
Maximum Leakage Current at V_R=20V at V_R=20V	I_R	25 50	nA uA
Maximum Capacitance at V_F=V_R=0	CJ	4	pF
Reverse Recovery Time @ I_F= I_R= 10mA, I_{RR}=-1mA, $V_{R=6V}$, R_L= 100 Ω	trr	4	ns
Typical Maximum Thermal Resistance	$R_{\theta JA}$	350	℃/W
Junction Temperature	Tj	-65 to +175	℃
Storage Temperature Range	Tstg	-65 to +175	℃

NOTE: 1.C_J at V_R=0, f=1MHZ

2.From I_F=10mA to I_R=1mA,V_R=6Volts,R_L=100Ω

3.The typical data above is for reference only(典型值仅供参考).

REV. 1, 6-Aug-2015

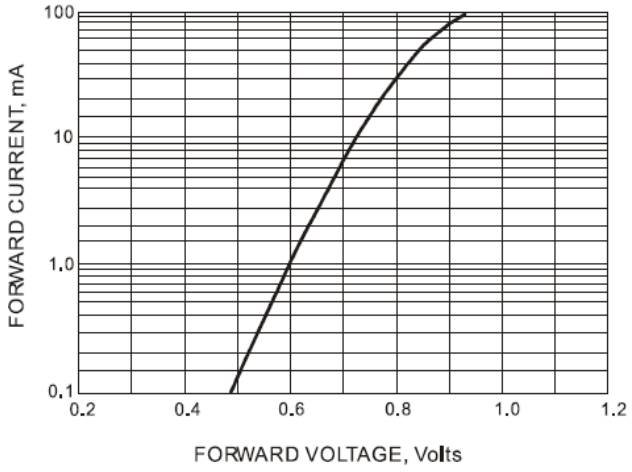

FORWARD VOLTAGE

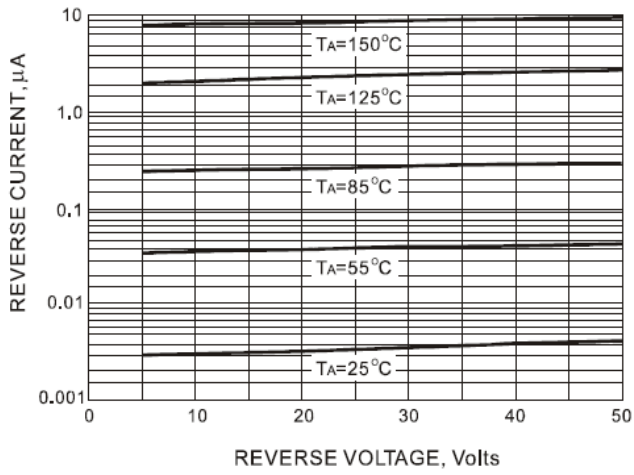

LEAKAGE CURRENT

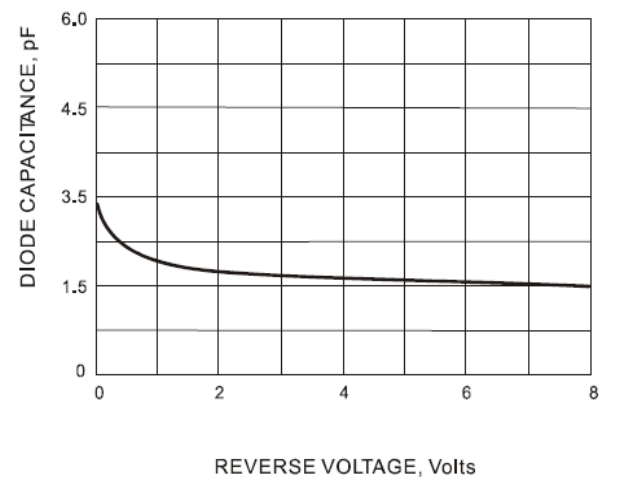

TYPICAL CAPATICANCE

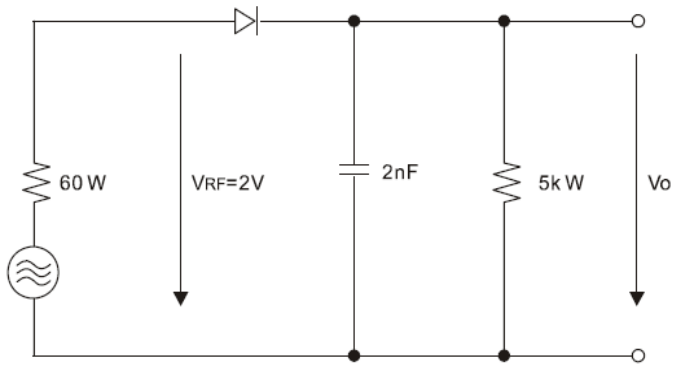

RECTIFICATION EFFCIENCY MEASUREMENT CIRCUIT

The cruve graph is for reference only, can't be the basis for judgment(曲线图仅供参考)!