KOUHI

Typical Electrical/Optical Characteristic Curves

KTL0500JCI Green Color

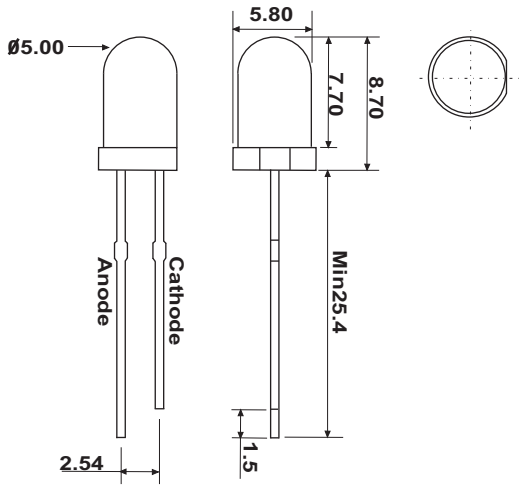

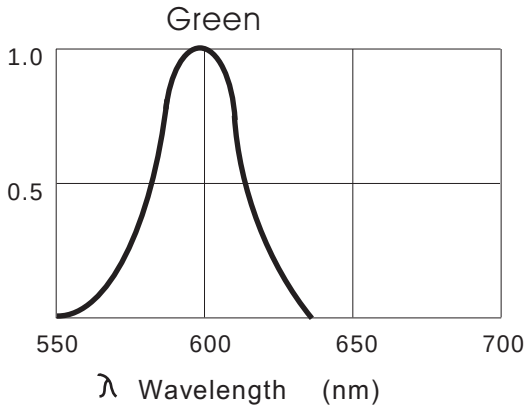

Relative Intensity vs. Wavelength

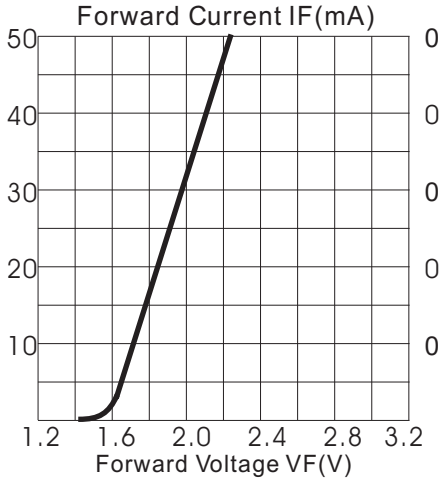

Forward Current VS Forward Voltage.

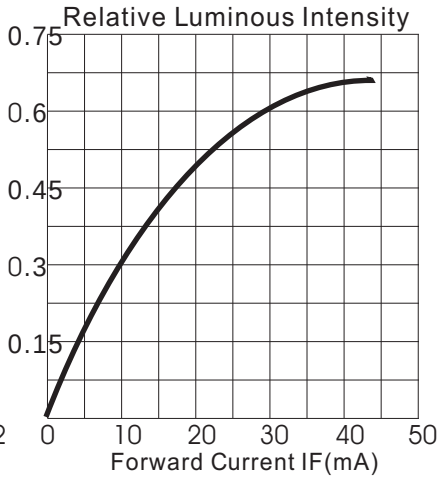

Relative Luminous Intensity VS. Forward Current

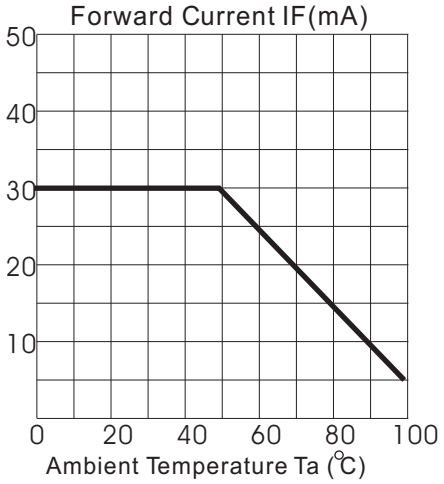

Ambient Temperature Ta (℃)

Absolute Maximum Ratings at Ta =25℃

Parameter	Symbol	Condition	Min.	Typ.	Max.	Unit
Forward Voltage	Vf	If=20mA	1.6		2.3	V
Reverse Voltage	Vr	If=20mA	5.0		5.0	V
Luminous Intensity	Iv	If=20mA		400		mcd
Wavelength	Dλ	If=20mA		568		nm
LENS Color	Green Water Clear					

LED working lifetime 100,000 hrs

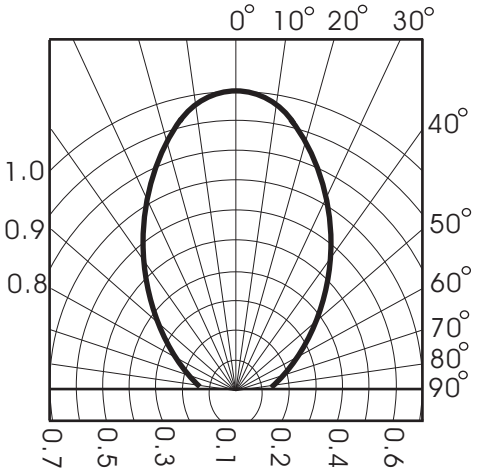

Relative Radiant Intensity