EFFICIENT INTERNATIONAL TECHNOLOGY

EK250M95-160UA

250A Thyristor Module
RoHS Compliant

PRODUCT FEATURES

- Heat transfer through aluminium nitride ceramic isolated metal baseplate
- High Surge Current Capability
- Low Inductance Package

APPLICATIONS

- DC Motor Control and Drives
- Battery Charges ,Heater controls,Light dimmers
- Temperature control

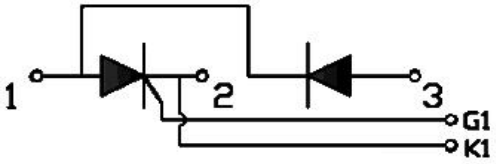

ABSOLUTE MAXIMUM RATINGS

T_C =25°C unless otherwise specified

Symbol	Parameter/Test Conditions	Values	Unit
		EK250M95-160UA	
V_{RRM}	Repetitive Peak Reverse Voltage	1600	V
V_{DRM}	Repetitive Peak Off State Voltage	1600	
V_{RSM}	Non-Repetitive Peak Reverse Voltage	1700	

Symbol	Parameter/Test Conditions		Values	Unit
$I_{T(AV)}$	Average On State Current	Single phase, half wave, 180°conduction, Tc= 85℃	250	A
$I_{T(RMS)}$	R.M.S. On State Current	Single phase, half wave, 180°conduction, Tc =85℃	393	
I_{TSM}	Non Repetitive Surge On State Current	t = 10ms, 50HZ, Tjm	9000	
I^2t	For Fusing	Vr = 0.6Vrrm, Tjm	405	KA^2S
T_J	Junction Temperature		-40 to +125	℃
T_{STG}	Storage Temperature Range		-40 to +125	℃
V_{ISO}	Isolation Breakdown Voltage	AC, 50Hz(R.M.S), t=1minute	3000	V
Torque	Module to Sink	Recommended (M6)	4~6	Nm
Torque	Module Electrodes	Recommended (M8)	8~10	Nm
R_{thJC}	Junction to Case Thermal Resistance		0.12	K /W
Weight			700	g

ELECTRICAL CHARACTERISTICS

T_C =25°C unless otherwise specified

Symbol	Parameter/Test Conditions		Min.	Typ.	Max.	Unit
I_{DRM}	Maximum Peak Off-State Current	$V_D = V_{DRM}$, T_J = 125°C			25	mA
I_{RRM}	Maximum Peak Reverse Current	$V_R = V_{RRM}$, T_J = 125°C			25	
V_{TM}	Maximum on-state voltage drop	I_{TM} =750A			1.8	V
V_{GT}	Max. required DC gate voltage to trigger	V_A=6V, R_A=1Ω	2.5			V
I_{GT}	Max. required DC gate current to trigger	V_A=6V, R_A=1Ω	180			mA
V_{GD}	Max. required DC gate voltage not to trigger,	$V_D = V_{DRM}$, T_J = 125°C			0.25	V
I_{GD}	Max. required DC gate current not to trigger,	$V_D = V_{DRM}$, T_J = 125°C			10	mA
I_H	Maximum holding current			180		mA
I_L	Maximum latching current			400		mA
P_{GM}	Maximum peak gate power				10	W
$P_{G(AV)}$	Maximum average gate power				3	
dv/dt	Critical Rate of Rise of Off-State Voltage,T_J=125°C,exponential to 67% rated V_{DRM}				800	V/μs
di/dt	V_D = 2/3V_{DRM},I_G = 0.3A, dig/dt=0.3A/μs, T_J = 125°C				150	A/μs

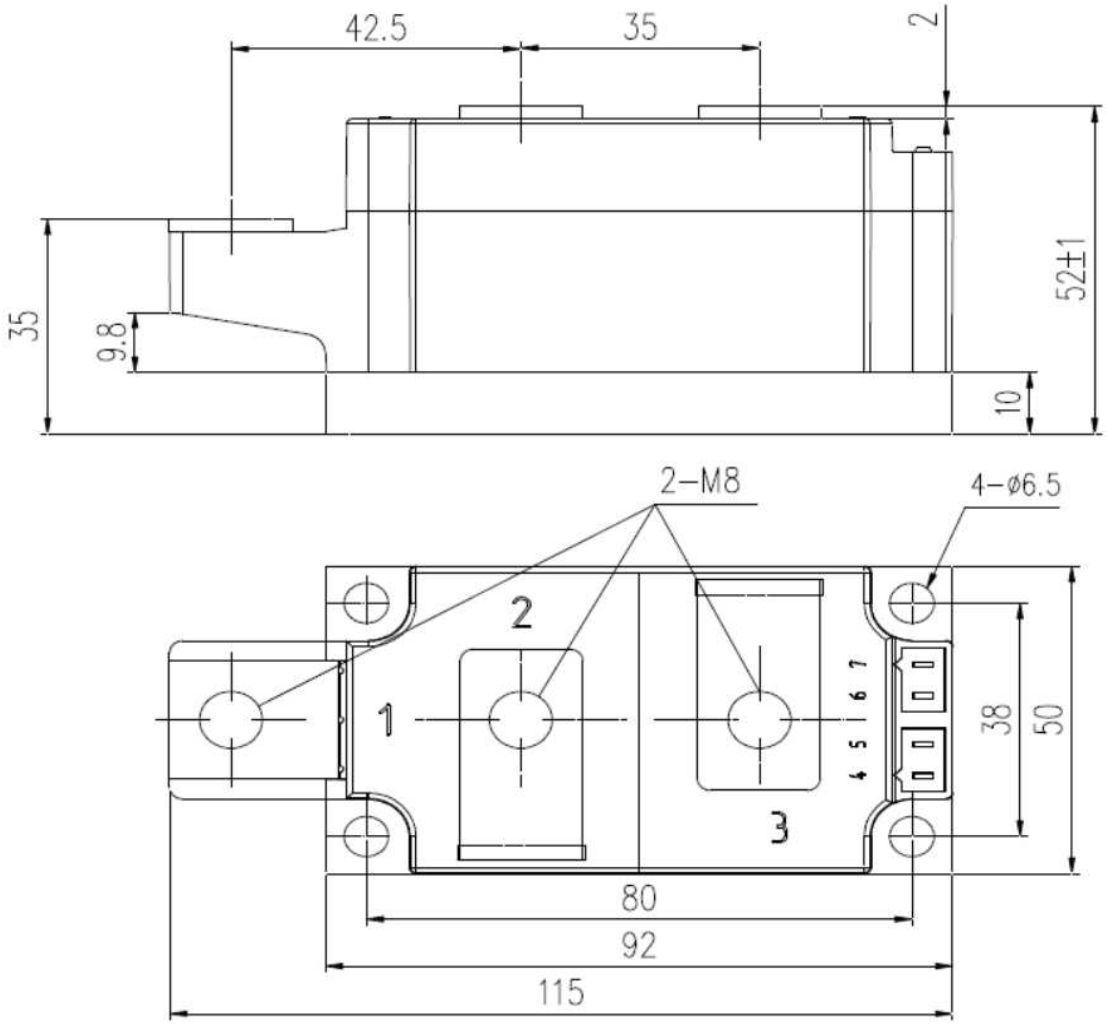

Dimensions in (mm)
Package Outline