Type VT-V

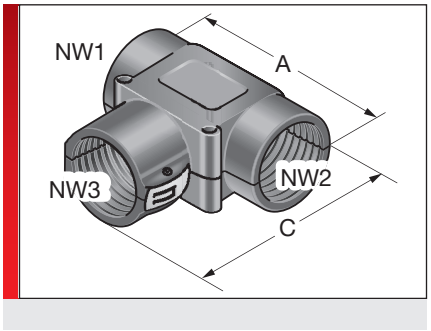

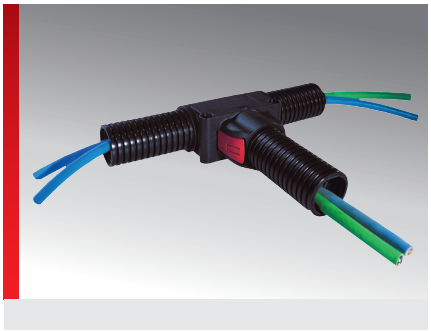

PRODUCT INFORMATION

The T distributors are made of specially modified polyamide 6. The material is halogen, phosphor and cadmium-free.
The T distributors are ideal for quick and easy coupling of Murrplastik cable protection conduits. With their split design, simple routing of cables is guaranteed.
The VT-V conduit distributors feature the following advantages:

- Flat construction
- Separable
- Half-shells can be screwed together or fastened to the control cabinet individually
- Simple assembly with a sliding lock and optional lock screw assembly
- Low cost connector for cable protection conduits
- High tear-out strength

SPECIFICATIONS

IP 42

-40 – 110 °C transient / short term 140 °C

V0 self-extinguishing

RoHS

Made in Germany

Type	Order No.	Colour	for Murrflex with NW1 / NW2 / NW3	A mm	C mm	Pack qty.
Hose distributor suitable for Murrflex EW and EWX						
VT 323232-V	83702466	Black	29 / 29 / 29	80.00	85.00	1
VT 505050-V	83702473	Black	48 / 48 / 48	130.00	120.00	1
VT 707070-V	83702482	Black	70 / 70 / 70	154.00	145.00	1

Protection class
IP 42

Temperature / temperature range
-40 – 110 °C transient / short term 140 °C

Fire classification
V0 self-extinguishing

Halogen-free

© Murrplastik Systemtechnik GmbH • proID_65970~20160628~890283~suv_vt_v

Type VT-V

RoHS (EC Directive 202/95/EC)

Made in Germany

All details given in our sales material prospectuses and catalogues as well as the information available online are based on our current knowledge of the products described.

The electronic data and files made available by Murrplastik, particularly CAD files are based on our current knowledge of the product described.

A legally binding assurance of certain properties or the suitability for a certain purpose can not be determined from this information.

All information with respect to the chemical and physical properties of Murrplastik products as well as application advice given verbally, in writing or by tests, is given to the best of our knowledge.

This does not free the purchaser of carrying out their own inspections and tests in order to determine the suitability of a product for a specific purpose.

Murrplastik accepts no responsibility for the available information being up-to-date, correct or complete. Neither do we accept responsibility for the quality of this information.

Murrplastik accepts no liability for damage caused as a result of using our products.

Murrplastik reserves the right to make technical changes and improvements through constant further development of products and services.

Our General Terms and Conditions apply.

© Murrplastik Systemtechnik GmbH • proID_65970~20160628~890283~suv_vt_v