UniOhm

C O N F I D E N T I A L D O C U M E N T

SPECIFICATION FOR APPROVAL

ROPLA ELEKTRONIK

Description : Metal Film Fixed Resistors

Uniohm Part no.:

MFF06FF1004T50 (MF 0.6W-S +/-1% 1MΩ 50PPM (Non-Flame))

Approved by

Parts corresponding to RoHS Compliant: 2005-Apr.-1

Approved	Checked	Prepared
Mr. Jack Lin	Mr. S. Polthanasan	Ms. P. Supatta

Issue Date: 2018/01/19

CHANGE NOTIFICATION HISTORY			
Version	**Date of Version**	**History**	**Remark**
1	2018/01/19	1. Resistance Value : 1MΩ	
		2. Finished size: 2.5mm x 6.8mm	
		3. Lead wire diameter: 0.54 ± 0.05 (Unit: mm)	
		4. Pitch of Tape(PT): 52mm	

Customer: ROPLA ELEKTRONIK	**Part No.: MFF06FF1004T50**

1. Scope:

This specification for approval relates to Metal Film Fixed Resistors manufactured by UniOhm 's specifications.

2. Type designation:

The type designation shall be in the following form :

(Ex.)	MF	0.6W-S	F	1MΩ
	Type	Power Rating	Resistance Tolerance	Nominal Resistance

3. Ratings:

Ratings shall be shown in the table 1.

Table 1

Type	MF
Rated Power	0.6W at 70℃
Max. Working Voltage	250 V
Max. Overload Voltage	500 V
Dielectric Withstanding Voltage	500 V
Rated Ambient Temp.	70 ℃
Operating Temp. Range	-55℃ --- +155℃
Resistance Tolerance	± 1%
Resistance Value	1MΩ

3.1 Power rating:

Resistors shall have a power rating based on continuous full load operation at an ambient temperature of 70 ℃. For temperature in excess of 70 ℃ , the load shall be derated as shown in the figure 1.

3.2 Voltage rating:

Resistors shall have a rated direct-current (DC) continuous working voltage or an approximate sine-wave root-mean-square (RMS) alternating-current (AC) continuous working voltage at commercial-line frequency and waveform corresponding to the power rating , as determined from the following formula :

$$RCWV = \sqrt{P \times R}$$

Were : RCWV = Rated DC or RMS AC continuous working voltage at commercial-line frequency and waveform (volt)

P = Power Rating (watt)

R = Nominal Resistance (ohm)

Metal Film Fixed Resistors

In no case shall the rated DC or RMS AC continuous working voltage be greater than the applicable maximum value

Figure 1.

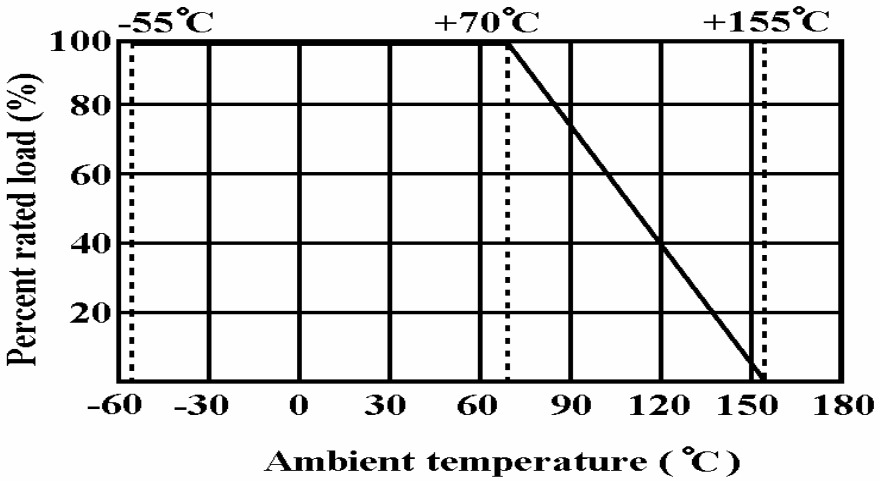

3.3 Nominal resistance :

Effective figures of nominal resistance shall be in accordance with E-96 series, and resistance tolerance shall be shown by table 1.

4. Construction :

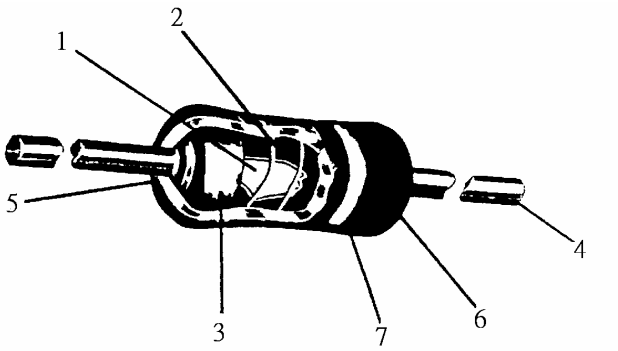

No.	Name	Material
1	Basic Body	Rod Type Ceramics
2	Resistance Film	Metal Film
3	End Cap	Steel (Tin plated iron surface)
4	Lead Wire	Annealed copper wire coated with tin
5	Joint	By Welding
6	Coating	Insulated & Non-Flame Paint (Color : Dark Green)
7	Color Code	Non-Flame Paint Epoxy Resin

Metal Film Fixed Resistors

5. Characteristics :

Characteristics	Limits	Test Methods (JIS C 5201-1)
DC. resistance	Must be within the specified tolerance	The limit of error of measuring apparatus shall not exceed allowable range or 1% of resistance tolerance (Sub-clause 4.5)
Insulation resistance	Insulation resistance is 10,000 MΩ Min	Resistors shall be clamped in the trough of a 90° metallic V-block or foil method use a metal foil shall be wrapped closely around the body of the resistor. After that shall be tested at DC potential respectively specified in the above list for 60 +10/-0 secs. (Sub-clause 4.6)
Dielectric withstanding voltage	No evidence of flashover mechanical damage, arcing or insulation break down	Resistors shall be clamped in the trough of a 90° metallic V-block or foil method use a metal foil shall be wrapped closely around the body of the resistor. After that shall be tested at AC potential respectively specified in the table 1. for 60 +10/-0 secs. (Sub-clause 4.7)
Temperature coefficient	Within the temperature coefficient specified below : ± 50 PPM/℃ Max.	Natural resistance change per temp. degree centigrade $\frac{R_2-R_1}{R_1(t_2-t_1)} \times 10^6$ (PPM/℃) R_1: Resistance value at room temperature (t1) R_2: Resistance value at room temp. plus 100 ℃ (t_2) (Sub-clause 4.8)
Short time overload	Resistance change rate is ± (0.5% + 0.05Ω) Max. with no evidence of mechanical damage	Permanent resistance change after the application of a potential of 2.5 times RCWV for 5 seconds (Sub-clause 4.13)
Terminal strength	No evidence of mechanical damage	**Direct load** : Resistance to a 2.5 kgs direct load for 10 secs. in the direction of the longitudinal axis of the terminal leads **Twist test :** Terminal leads shall be bent through 90 ° at a point of about 6mm from the body of the resistor and shall be rotated through 360° about the original axis of the bent terminal in alternating direction for a total of 3 rotations (Sub-clause 4.16)
Solderability	95 % coverage Min.	The area covered with a new, smooth, clean, shiny and continuous surface free from concentrated pinholes. Test temp. of solder : 245℃ ± 3℃ Dwell time in solder : 2 ~ 3 seconds (Sub-clause 4.17)

Metal Film Fixed Resistors

Characteristics	Limits	Test Methods (JIS C 5201-1)
Soldering temp. reference	Electrical characteristics shall be satisfied. Without distinct deformation in appearance. (95 % coverage Min.)	The leads immersed into solder bath to 3.2 to 4.8 mm. from the body. Permanent resistance change shall be checked. <u>Wave soldering condition: (2 cycles Max.)</u> Pre-heat : 100 ~ 120 ℃, 30 ± 5 sec. Suggestion solder temp.: 235 ~ 255 ℃, 10 sec. (Max.) Peak temp.: 260 ℃ <u>Hand soldering condition:</u> Hand Soldering bit temp. : 380 ± 10 ℃ Dwell time in solder : 3 +1/-0 sec.
Resistance to soldering heat	Resistance change rate is ± (1% + 0.05Ω) Max. with no evidence of mechanical damage	Permanent resistance change when leads immersed to 3.2 to 4.8 mm from the body in 350℃ ± 10 ℃ solder for 3 ± 0.5 seconds (Sub-clause 4.18)
Temperature cycling	Resistance change rate is ± (1% + 0.05Ω) Max. with no evidence of mechanical damage	Resistance change after continuous 5 cycles for duty shown below: **Step** / **Temperature** / **Time** 1 / -55℃ ± 3℃ / 30 mins 2 / Room temp. / 10～15 mins 3 / +155℃ ± 2℃ / 30 mins 4 / Room temp. / 10～15 mins (Sub-clause 4.19)
Vibration	Resistance change rate is ± (1% + 0.05Ω) Max.	55Hz, 3 planes 2hrs each Total amplitude = 1.5mm (Sub-clause 4.22)
Load life in humidity	**Resistance value** / **△ R/R** Non-Flame type / ± 5 %	Resistance change after 1,000 hours (1.5 hours "on", 0.5 hour "off") at RCWV in a humidity test chamber controlled at 40 ℃ ± 2 ℃ and 90 to 95 % relative humidity (Sub-clause 4.24.2.1)
Load life	**Resistance value** / **△ R/R** Non-Flame type / ± 5 %	7.10 Permanent resistance change after 1,000 hours operating at RCWV with duty cycle of (1.5 hours "on", 0.5 hour "off") at 70℃ ± 2℃ ambient (Sub-clause 4.25.1)
Resistance to solvent	No deterioration of protective coatings and markings	Specimens shall be immersed in a bath of trichroethane completely for 3 minutes with ultrasonic (Sub-clause 4.30)
Pulse overload	Resistance change rate is ± (1% + 0.05Ω) Max. with no evidence of mechanical damage	Resistance change after 10,000 cycles (1 sec. "on" , 25 secs. "off") at 4 times RCWV (Sub-clause 5.8)

Metal Film Fixed Resistors

6. Dimension : Unit :mm

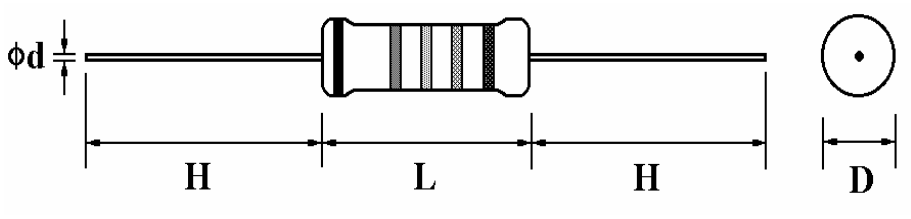

Type	Power Rating	D (Max.)	L (Max.)	d ± 0.05	H ± 3
MF	0.6W-S	2.5 mm	6.8 mm	0.54 mm	28 mm

Painting method:

Welding point, terminal and lead wire, is permissible to be exposed without the outer coated cover. The extent should be within 1/2 of the are angle.

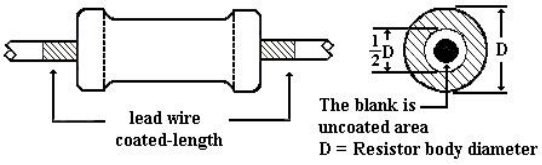

7. Marking :

7.1 Resistor :

Resistors shall be marked with color coding
colors shall be in accordance with JIS C 0802

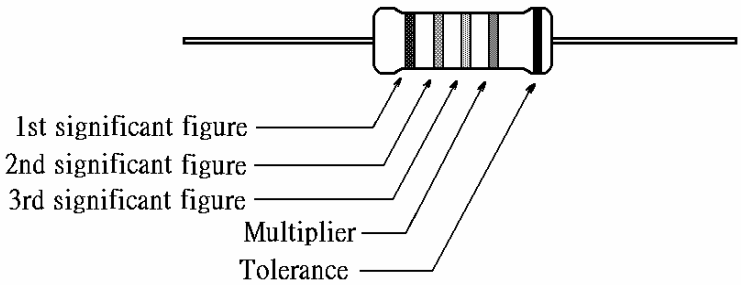

7.2 Label :

Label shall be marked with following items:

(1) Type and style
(2) Nominal resistance
(3) Resistance tolerance
(4) Quantity
(5) Lot number
(6) PPM

Ex.

Metal Film Fixed Resistors

Watt	:	0.6W-S	Val	:	1M
Q'TY	:	5,000	Tol	:	1%
Lot	:	813478	PPM	:	50

UniOhm Pb Free

Metal Film Fixed Resistors

8. Packing specification :

8.1 Taping dimension :

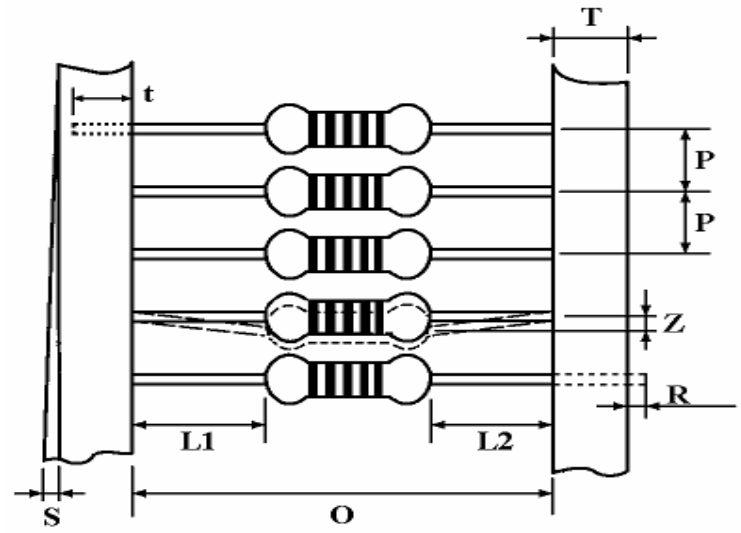

Dimensions (mm)

Type	Style	O	P	L_1-L_2	T	Z	R	t	S
MF-60-S	PT-52	52 ± 1	5 ± 0.3	1 Max.	6 ± 1	1 Max.	0	4 ± 1	0.5 Max.

8.2 Tape in box packing :

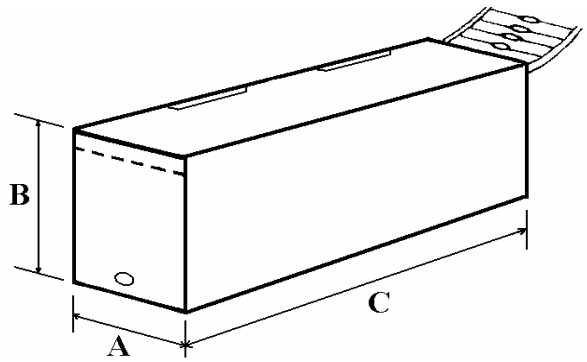

Bandoliers may also be contained in a cardboard box ("Ammopack")

Dimension (mm)

Type	Style	L (C) ± 5	W (A) ± 5	H (B) ± 5	Quantity Per Box (pcs.)
MF-60-S	PT-52	250	75	96	5,000

"Ammopack" is an abbreviation of "ammunition pack"

Metal Film Fixed Resistors

8.3 Tape on reel packing :

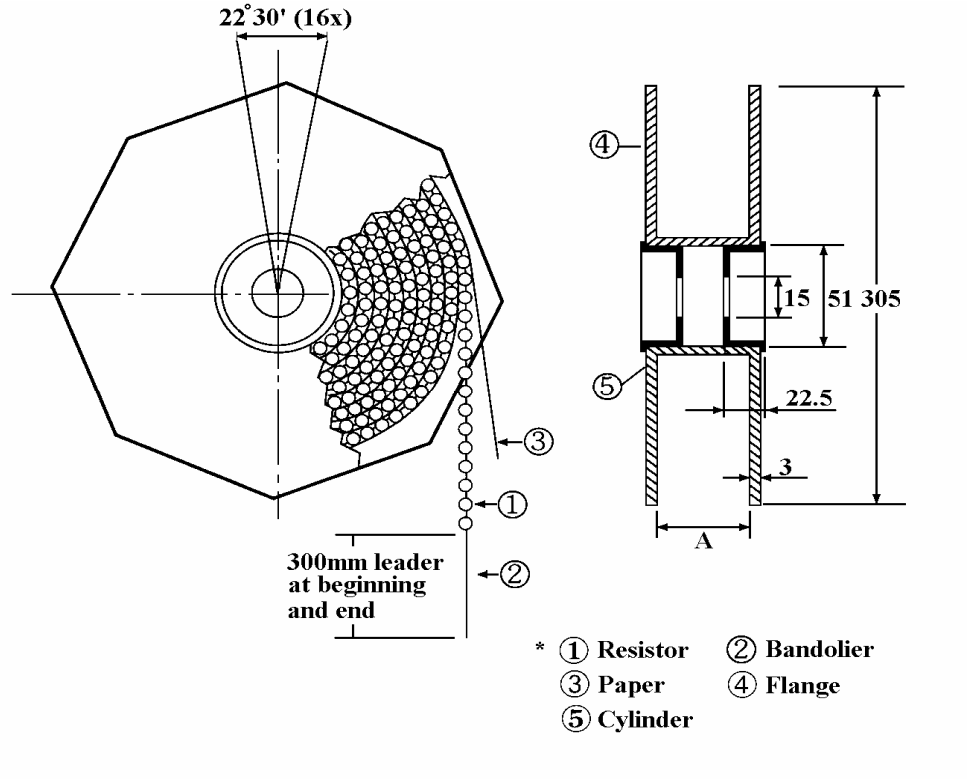

Dimension (mm) :

Type	Style	Across Flange (A)	Quantity Per Reel
MF-60-S	PT-52	73 ± 2	5,000 pcs.

Part Number System

Explanation of Part Number System
(Metal Film Fixed Resistors)

1	2	3	4	5	6	7	8	9	10	11	12	13	14
M	F	F	0	6	F	F	1	0	0	4	T	5	0

Product Type:
MF = Metal Film Fixed Resistor

Special Feature:
0 = Standard Product
F = Non-Flame
I = Non-Inductive Product

Tolerance:
B = ± 0.1%
C = ± 0.25%
D = ± 0.5%
F = ± 1%
G = ± 2%
J = ± 5%

Wattage:

Normal size:
W8 = 1/8W
W4 = 1/4W
W2 = 1/2W
1W = 1W
2W = 2W
3W = 3W

Small size:
S4 = 1/4W-S
S2 = 1/2W-S
06 = 0.6W-S
2S = 2W-S

Extra Small size:
U2 = 1/2W-SS
04 = 0.4W-SS

PPM requirement:
B = ± 15PPM
C = ± 25PPM
F = ± 50PPM
G = ± 100PPM
J = ± 200PPM

Resistance Value:
E-24 series: the 1st digit is"0", the 2nd & 3rd digits are for the significant figures of the resistance and the 4th indicate the number of zeros following:
"J" ~ 0.1, "K" ~ 0.01
Ex.: 4.7Ω ~ 47J, 4.7KΩ ~ 472
E--96 Series: the 1st to 3rd digits are significant figures of resistance and the fourth one denotes number of zeros following:
Ex.: 1.33KΩ = 1331

Packing Quantity:
1 = 1,000pcs
2 = 2,000pcs
3 = 3,000pcs
4 = 4,000pcs
5 = 5,000pcs
A = 500pcs
B = 2,500pcs
C = 10,000pcs
D = 20,000pcs
0 = for Bulk/Box packing

Packing Type:
A = Tape/Box
T = Tape/Reel
B = Bulk/Box
P = Tape/Box of PT-26mm

Addition Information:
0 = PT-52mm, NIL for PT-26mm
8 = PT-58mm
9 = PT-64mm

Sample: MF 0.6W-S +/- 1% 50ppm 1MΩ (Non-Flame) T/R-5,000 → MFF06FF1004T50

Metal Film Fixed Resistors

Environment Related Substance

This product complies to EU RoHS directive, EU PAHs directive, EU PFOS directive and Halogen free.

Ozone layer depleting substances.

Ozone depleting substances are not used in our manufacturing process of this product.
This product is not manufactured using Chloro fluorocarbons (CFCs), Hydrochlorofluorocarbons (HCFCs), Hydrobromofluorocarbons (HBFCs) or other ozone depleting substances in any phase of the manufacturing process.

Storage Condition

The performance of these products, including the solderability, is guaranteed for a year from the date of arrival at your company, provided that they remain packed as they were when delivered and stored at a temperature of 25°C ± 10°C and a relative humidity of 60%RH ± 10%RH, chemical and dust free atmosphere

Even within the above guarantee periods, do not store these products in the following conditions. Otherwise, their electrical performance and/or solderability may be deteriorated, and the packaging materials (e.g. taping materials) may be deformed or deteriorated, resulting in mounting failures.

1. In salty air or in air with a high concentration of corrosive gas, such as Cl_2, H_2S, NH_3, SO_2, or NO_2
2. In direct sunlight