1. ARTICLE Across-The-Line Capacitor, XE Series (XE○○○ −Z)
(Correspondence product of RoHS Restriction)
2. APPROVED STANDARD (National Safety Standard) Japan,China Product
Remarks: In case of application to National Safety Standard, Name is XE○○○, not XE○○○-Z

U L
Specification : UL 60384-14
File No : E47474
Types ; XE SERIES (XE102～XE105)
Rated voltage : AC275V(X_1)XE102～XE105/AC250V(Y_2)XE102～XE682

c-UL
Specification : CSA-E60384-14
File No : E47474
Types ; XE SERIES (XE102～XE105)
Rated voltage : AC275V(X_1)XE102～XE105/AC250V(Y_2)XE102～XE682

C S A
Specification : CSA-E60384-14
File No : LR37404/LR104926
Types ; XE SERIES (XE102～XE105)
Rated voltage : AC275V(X_1)XE102～XE105/AC250V(Y_2)XE102～XE682

V D E
Specification ; IEC60384-14
File No ; Nr.40021020 / XE102～682 250V Y2 40/100/56
File No ; Nr.40021020 / XE102～105 275V X1 40/100/56
Rated voltage : AC275V(X_1)XE102～XE105/AC250V(Y_2)XE102～XE682

Electrosuisse
Specification ; IEC60384-14
File No ; 12.0477 / XE102～682 250V Y2 40/100/56
File No ; 12.0477 / XE102～105 275V X1 40/100/56
Rated voltage : AC275V(X_1)XE102～XE105/AC250V(Y_2)XE102～XE682

SEMKO
Specification ; IEC60384-14
Subject ; Capacitor for radio interference suppression
File No ; 1021983 / XE102～682 250V Y2 40/100/56
File No ; 1021983 / XE102～105 275V X1 40/100/56
Rated voltage : AC275V(X_1)XE102～XE105/AC250V(Y_2)XE102～XE682

FIMKO
Specification ; IEC60384-14
Subject ; Capacitor Series
File No ; FI 26476 / XE102～682 250V Y2 40/100/56
File No ; FI 26476 / XE102～105 275V X1 40/100/56
Rated voltage : AC275V(X_1)XE102～XE105/AC250V(Y_2)XE102～XE682

DEMKO
Specification ; IEC60384-14
Subject ; Kondensator for radiointerference suppression
File No ; 315532-01 / XE102～682 250V Y2 40/100/56
File No ; 315532-01 / XE102～105 275V X1 40/100/56
Rated voltage : AC275V(X_1)XE102～XE105/AC250V(Y_2)XE102～XE682

NEMKO
Specification ; IEC60384-14
File No ; P10213515 / XE102～682 250V Y2 40/100/56
File No ; P10213515 / XE102～105 275V X1 40/100/56
Rated voltage : AC275V(X_1)XE102～XE105/AC250V(Y_2)XE102～XE682

O V E
Specification ; IEC60384-14
File No ; 20938-003-03 XE102～682 250V Y2 40/100/56
File No ; 20938-003-03 XE102～105 275V X1 40/100/56
Rated voltage : AC275V(X_1)XE102～XE105/AC250V(Y_2)XE102～XE682

I M Q
Specification ; IEC60384-14
File No ; V4048 XE102～682 250V Y2 40/100/56
File No ; V4047 XE102～105 275V X1 40/100/56
Rated voltage : AC275V(X_1)XE102～XE105/AC250V(Y_2)XE102～XE682

KC
Specification : K60384-14
Types/File No :
XE102～XE104 (X1)/ HU03007-7004B (Japan Product)
XE104～XE334 (X1)/ HU03007-7005B (Japan Product)
XE334～XE105 (X1)/ HU03007-7006B (Japan Product)
XE102～XE682 (Y2)/ HU03007-7003B (Japan Product)
XE102～XE104 (X1)/ HU03005-7012B (China Product)
XE104～XE334 (X1)/ HU03005-7013B (China Product)
XE334～XE105 (X1)/ HU03005-7014B (China Product)
XE102～XE682 (Y2)/ HU03005-7004B (China Product)
Rated voltage : AC275V(X_1)XE102～XE105/AC250V(Y_2)XE102～XE682

3. SHAPE, DIMENSION & MARKING

Unit : mm

a) XE102 –Z ～ XE682 –Z

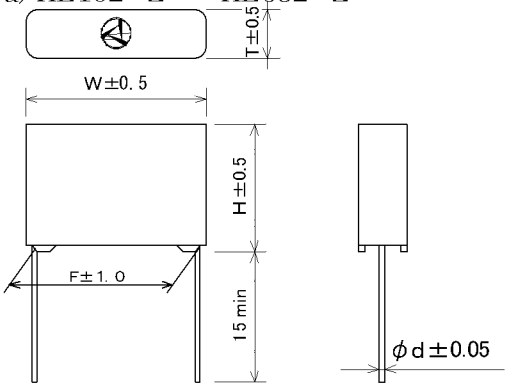

Example of approval mark
(The other face)

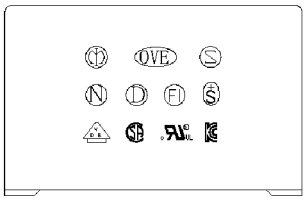

b) XE102 –ZC ～ XE682 –ZC

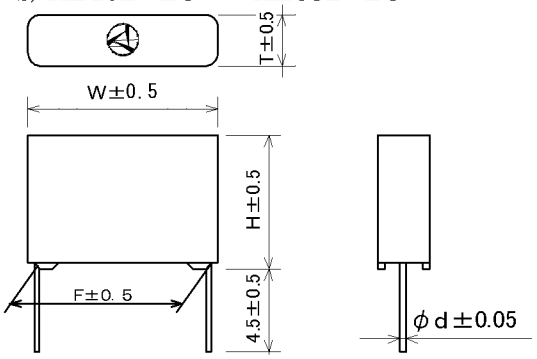

c) XE102 –ZC3.5 ～ XE682 –ZC3.5

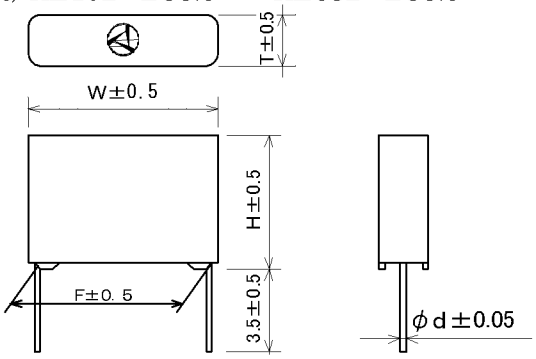

Part No.	W	H	T	F	d
XE102 –Z( )	17.0	12.5	5.5	15.0	0.8
XE152 –Z( )	17.0	12.5	5.5	15.0	0.8
XE222 –Z( )	17.0	12.5	5.5	15.0	0.8
XE332 –Z( )	17.0	12.5	5.5	15.0	0.8
XE472 –Z( )	17.0	12.5	5.5	15.0	0.8
XE682 –Z( )	17.0	12.5	5.5	15.0	0.8

d)XE103 –Z ～ XE105 –Z

Unit : mm

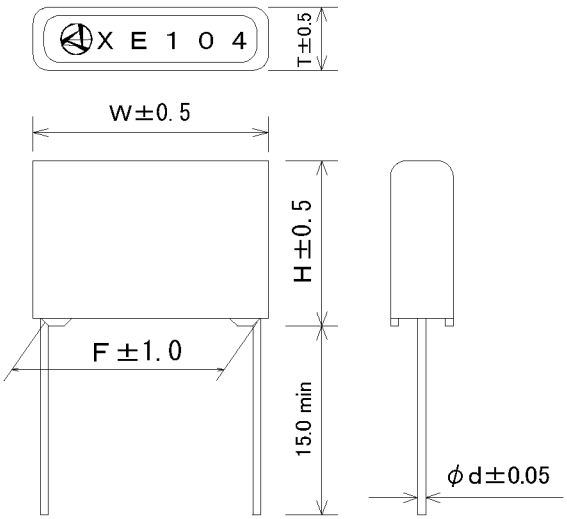

Example of approval mark

The other face

a)XE102-Z-()～XE682-Z-()

b)XE103-Z-()～XE683-Z-()

c)XE104-Z-()～XE334-Z-()

d)XE474-Z-()～XE105-Z-()

e) XE103 –ZC ～ XE105 –Z C

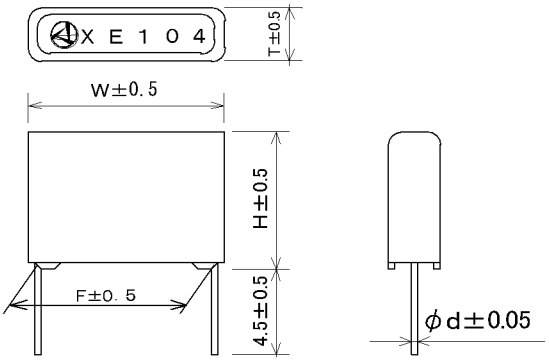

f) XE103 –ZC3.5 ～ XE105 –Z C3.5

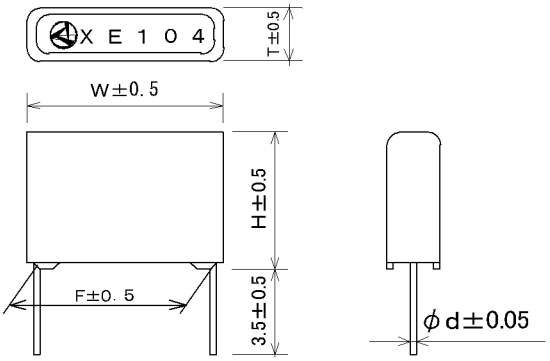

Part No.	W	H	T	F	d
XE103 －Z( )	17.0	12.0	5.0	15.0	0.6
XE153 －Z( )	17.0	12.0	5.0	15.0	0.6
XE223 －Z( )	17.0	12.0	5.0	15.0	0.6
XE333 －Z( )	17.0	12.5	5.5	15.0	0.8
XE473 －Z( )	17.0	13.5	6.5	15.0	0.8
XE683 －Z( )	17.0	15.0	8.0	15.0	0.8
XE104 －Z( )	25.0	16.0	6.5	22.5	0.8
XE154 －Z( )	25.0	17.5	8.0	22.5	0.8
XE224 －Z( )	25.0	19.5	10.0	22.5	0.8
XE334 －Z( )	30.0	22.0	11.0	27.5	0.8
XE474 －Z( )	30.0	24.5	13.5	27.5	0.8
XE684 －Z( )	30.5	28.0	16.5	27.5	1.0
XE105 －Z( )	36.0	30.5	20.0	32.5	1.0

4.RATING (Ambient Temperature 20℃)

4.1 Rated voltage : Y2:102～682:250Vac
X1:102～105:275Vac

4.2 Nominal capacitance : See table-1

4.3 Tolerance of capacitance : ±20%

4.4 Dissipation factor : 0.01max

4.5 Test voltage

Between terminals

102～682 : 2000Vac 50/60Hz 60sec

103～105 : 1250Vac 50/60Hz 60sec

Between terminal to case

: 2100Vac 50/60Hz 60sec

4.6 Insulation resistance

Between terminals

C≦0.33μF : 15000MΩ min. at 100Vdc

C＞0.33μF : 5000ΩF min. at 100Vdc

Between terminal to case: 100000MΩ min. at100Vdc

4.7 Operating temperature : -40～+100℃

table-1

Part No.	Nominal Capacitance	Rated Current	Resonance Frequency (Reference)
XE102 －Z( )	0.001 μF	0.1mA	33.0MHz
XE152 －Z( )	0.0015μF	0.1mA	27.0MHz
XE222 －Z( )	0.0022μF	0.2mA	22.0MHz
XE332 －Z( )	0.0033μF	0.3mA	18.0MHz
XE472 －Z( )	0.0047μF	0.4mA	15.0MHz
XE682 －Z( )	0.0068μF	0.6mA	13.0MHz
XE103 －Z( )	0.01 μF	1.0mA	11.0MHz
XE153 －Z( )	0.015 μF	1.6mA	8.2MHz
XE223 －Z( )	0.022 μF	2.3mA	6.8MHz
XE333 －Z( )	0.033 μF	3.4mA	5.6MHz
XE473 －Z( )	0.047 μF	4.9mA	4.7MHz
XE683 －Z( )	0.068 μF	7.0mA	3.9MHz
XE104 －Z( )	0.1 μF	10.4mA	3.3MHz
XE154 －Z( )	0.15 μF	15.5mA	2.7MHz
XE224 －Z( )	0.22 μF	22.9mA	2.2MHz
XE334 －Z( )	0.33 μF	34.2mA	1.8MHz
XE474 －Z( )	0.47 μF	48.7mA	1.5MHz
XE684 －Z( )	0.68 μF	70.5mA	1.3MHz
XE105 －Z( )	1.0 μF	103.6mA	1.1MHz

Remarks: The maximum use of circuit voltage is the rated voltage and the rated current refers to the reference value at rated voltage 60Hz.
Besides, resonance frequency shows in the table is the reference value.

5. PERFORMANCE

No	Application Item		Performance	Test method
1	Test Voltage between terminals		No Defect	Ref. JIS C 5101-14 4.2.1 102-682: 2000Vac 50/60Hz 60sec.
	Terminal to case			103-105: 1250Vac 50/60Hz 60sec.
2	Insulation resistance Between terminals		Min.15000MΩ for C≦0.33μF Min. 5000ΩF for C>0.33μF	Ref. JIS C 5101-14 4.2.5 Measured at 100Vdc 60sec..
	Terminals to case		Min. 100000MΩ	Ref. JIS C 5101-14 4.2.5 Measured at 100Vdc 60sec..
3	Capacitance		Shall be within the tolerance	Ref. JIS C 5101-14 4.2.2 1kHz, max. 5Vrms
4	Dissipation factor		0.01 max	Ref. JIS C 5101-14 4.2.3 1kHz, max. 5Vrms
5	Robustness of terminations	Tensile	No wire breakage and no damage of capacitor.	JIS C 5101-14 4.3 Lead Dia.: above 0.5mm but below 0.8mm.(Tensile 10N, Bending 5N) Lead Dia.: above 0.8mm but below 1.25mm.(Tensile 20N, Bending 10N)
		Bending		
6	Vibration		No open and short circuit occurred. Stable condition keep unchanged. Comply to condition 1～ 4 after the test.	Ref. JIS C 5101-14 4.7 Vibration frequency 10 ～ 55Hz, Amplitude 1.5mm add X,Y,Z directions for 2hrs per direction.
7	Solder ability		Solder layer shall cover 90% along the circumference of lead wire.	Ref. JIS C 5101-14 4.5 Rosin density 25%, dipping duration 2±0.5sec. Pb free solder (Sn-3Ag-0.5Cu) at temp. 245℃.

No	Application Item	Performance	Test method
8	Resistance to soldering heat	Appearance : No abnormality	Ref. JIS C 5101-14 4.4 Use 1.0mm thickness glass epoxy board as a holder. Solder temp.270℃, dipping duration 5 sec. Left for 5 sec. at room temp. after dipping and again dip in solder for 5 sec. The test voltage is to be satisfied to No.1
		Test voltage : To satisfy No.1	
		Cap. ratio: Within ±5% of initial value.	
9	Resistance to solvent	Appearance: No abnormality	Ref. JIS C60068-2-45 Use I.P.A or equivalent.
		Cap. ratio : Within ±1% of initial value.	
		Dissipation Factor. Max.0.01	
10	Resistance to Lower category temp.	Cap. ratio at -40℃ : Within 0 / -8% of initial value 20℃	Ref. JIS C 5101-14 11.4 (Characteristic at temp. -40℃)
11	Resistance to dry heat. Insulation resistance	Between terminals: min. 100 MΩ Terminals to case: min. 10000MΩ	Ref. JIS C 5101-14 4.11.2 (Characteristic at temp. +100℃)
	Cap.ratio at +100℃	Within +8 / 0% of initial value 20℃	
12	Rapid change of temperature	Appearance : No abnormality	Ref. JIS C 5101-14 4.6 Temperature -40℃ for 60 min. and +100℃ for 60min. as 1 cycle and it shall be repeated for 100 cycles. (The step of normal temp. is not performed.)
		Test voltage : To satisfy No.1	
		Insulation resistance : To satisfy No.2	
		Cap ratio : Within ±5% of initial value	
		Dissipation factor: Max.0.01	
13	Immersion cycle	Appearance : No abnormality	To be immersed in the bath, one a clean water at temp. 65℃ and the other saturated salt water bath at 0℃ for 15 min. as 1cycle, and to be repeated for 2 cycles. The capacitor shall be washed in water and let alone for 2 to 24 hrs.
		Test voltage : To satisfy No.1	
		Insulation resistance : To satisfy No.2	
		Cap ratio : Within ±5% of initial value	
		Dissipation factor: Max.0.01	
14	Damp heat (Steady state)	Appearance: No abnormality	Ref. JIS C 5101-14 4.12 Temperature 60℃ and relative humidity 90-95% for 500 hrs.
		Test voltage: To satisfy item No.1	
		Insulation resistance: At least1/2 of item No.2	
		Cap. ratio: Within ±8% of initial value.	
		Dissipation factor: max. 0.011	

No	Application Item	Performance	Test method
15	Damp heat cycle	Appearance: No abnormality Test voltage: To satisfy item No.1 Insulation resistance: To satisfy item No.2 Cap. ratio: Within ±5% of initial value. Dissipation factor: max. 0.01	Ref. JIS C 5101-14 4.11
16	Damp heat loading	Appearance: No abnormality Insulation resistance: At least 1/2 of item No.2 Cap. ratio: Within ±8% of initial value. Dissipation factor: max.0.011	Temp. 40℃ and relative humidity 90-95%, and DC voltage 2 times of the nominal rated voltage shall be applied for 1000 hrs.
17	Endurance	Appearance: No abnormality Insulation resistance: At least 1/2 of item No.2 Cap. ratio: Within ±10% of initial value. Dissipation factor: max. 0.011	Ref. JIS C 5101-14 4.14 Temp. 100℃, 344Vac shall be applied continuously, only 0.1 sec set up to 1000Vac per each hour.The test shall be performed for 1000 hrs.
18	Passive flammability	Reduce inflammation within regulation time.	Ref. JIS C 5101-14 4.17

6. STRUCTURE DRAWING

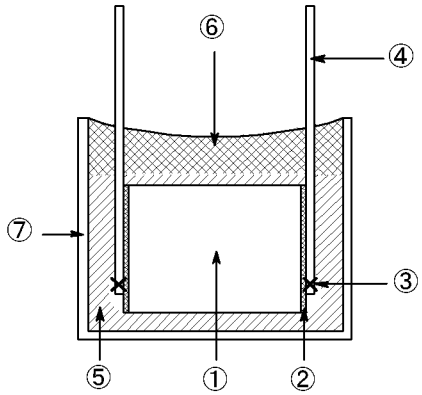

All components to be RoHS restriction correspondence articles.

No.	Article	Materials	Flame resistance
1	Capacitor element	Metallized PET film capacitor	
2	Soldering weld (Metalicon)	Pb free correspondence	
3	Soldering or weld	Pb free correspondence	
4	Lead wire	Pb free correspondence (plated copper clad steel wire)	
5	Filler resin	Polyurethane resin	UL94 V-2 correspond
6	Filler resin	Polyurethane resin	UL94 V-0 approved
7	Modified Case	Polybutylene terephthalate	UL94 V-0 approved

Remarks: The above materials are subjected to change into specifications and other related standards in the range which guarantees the regular contents.
The above materials are described as existing chemical materials, complied with 'Inspection and manufacturing control of chemical materials of law'.
Not including any material for damaging Ozone layer.

7. MARKING

a) PART NUMBER (XE103-Z～XE105-Z:STAMP-DIE ON CASE)
b) RATED VOLTAGE
c) SIMBOL OF AC VOLTAGE
d) CAPACITANCE TOLERANCE
e) NOMINAL CAPACITANCE
f) MANUFACTURING LOT SYMBOL
g) TRADEMARK OF OKAYA ELECTRIC INDUSTRIES CO., LTD. (STAMP-DIE ON CASE)
h) SYMBOL OF SAFETY STANDARD APPROVALS

8. MANUFACTURING LOT SYMBOL

・Refer clause 3 “DIMENSION” for the marking position.

・China product is marked with its lot symbol.

・Marking

The lot symbol is marked according to below table with 8 years cycle.

TOHOKU OKAYA CO., LTD. (8 years cycle)

year \ month	1	2	3	4	5	6	7	8	9	10	11	12
2010	.A	.B	.C	.D	.E	.F	.G	.H	.I	.J	.K	.L
2011	.├	.N	.O	.P	.Q	.R	.S	.T	.U	.V	.┤	.X
2012	.Y	.Z	.a	.b	.d	.e	.f	.┘	.h	.i	.┌	.n
2013	.u	.ひ	.┐	.メ	.y	.2	.3	.4	.5	.6	.7	.9
2014	:A	:B	:C	:D	:E	:F	:G	:H	:I	:J	:K	:L
2015	:├	:N	:O	:P	:Q	:R	:S	:T	:U	:V	:┤	:X
2016	:Y	:Z	:a	:b	:d	:e	:f	:┘	:h	:i	:┌	:n
2017	:u	:ひ	:┐	:メ	:y	:2	:3	:4	:5	:6	:7	:9

China Factory (8 years cycle)

year \ month	1	2	3	4	5	6	7	8	9	10	11	12
2010	¦A	¦B	¦C	¦D	¦E	¦F	¦G	¦H	¦I	¦J	¦K	¦L
2011	¦├	¦N	¦O	¦P	¦Q	¦R	¦S	¦T	¦U	¦V	¦┤	¦X
2012	¦Y	¦Z	¦a	¦b	¦d	¦e	¦f	¦┘	¦h	¦i	¦┌	¦n
2013	¦u	¦ひ	¦┐	¦メ	¦y	¦2	¦3	¦4	¦5	¦6	¦7	¦9
2014	¡A	¡B	¡C	¡D	¡E	¡F	¡G	¡H	¡I	¡J	¡K	¡L
2015	¡├	¡N	¡O	¡P	¡Q	¡R	¡S	¡T	¡U	¡V	¡┤	¡X
2016	¡Y	¡Z	¡a	¡b	¡d	¡e	¡f	¡┘	¡h	¡i	¡┌	¡n
2017	¡u	¡ひ	¡┐	¡メ	¡y	¡2	¡3	¡4	¡5	¡6	¡7	¡9

.A Symbol for TOHOKU OKAYA CO., LTD.

¦A Symbol for China Factory

9.MANUFACTURING COUNTRY
China.... Dongguan Factory
Japan.... TOHOKU OKAYA CO., LTD.

10. ORDERING INFORMATION

XE 104 - Z ( )

- ( ) — Indication of Lead wire length
  - None : 15.0mm min.
  - C : 4.5±0.5mm
  - C3.5 : 3.5±0.5mm
- Z — Miniature form
- 104 — Nominal capacitance
- XE — Across-The-Line capacitor XE series

11. REFERENCE STANDARDS
JIS C 5101-1 FIXED CAPACITORS FOR ELECTRONIC EQUIPMENT Vol. 1
JIS C 5101-14 FIXED CAPACITORS FOR ELECTRONIC EQUIPMENT Vol. 14
JIS C 60068-2-45 ENVIRONMENTAL TESTING PROCEDURES

12. TERMS OF USE
Please use this product with reference to the following contents in order to avoid from accident.

- 「EIAJ RCR-2350B Guideline of notabilia for fixed plastic film capacitors for use in electronic equipment」 published by Japan Electronic and Information Technology Industries Association.
- 「Attention on use of the noise suppression capacitor」 as per attached.

13.OTHERS

- Tolerance of lead wires located from center of thickness.

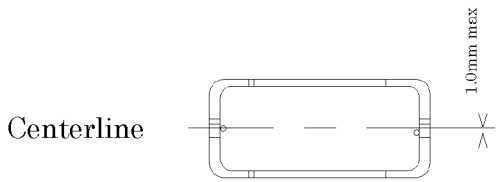

- This specification is applied from delivery start date of the change marking product.

Attention on use of the noise suppression capacitor.

Oct. 15, 2013
Okaya Electric Ind. Co., Ltd.
Capacitor Dept.

The noise suppression capacitor is using the metallized plastic film mainly for the dielectric. Therefore, the insulation, voltage-withstand, heat resistance, the frequency characteristic, etc. are excellent, and it also has high reliability and safety.

However, it sometimes results in a serious accident with not designing, after fully knowing the characteristics depending on a use. Since these data explain the attention on use on a design etc. concretely, it is surely individual before use. Please use correctly after often reading the technical data, delivery specifications and these data. Please save in the place seen always after reading.

1. Failure mode.

Generally, a metallized film capacitor is an action which carries out natural recovery of the insulated destructive part, when there is a self-recovery action, high surge voltage is added while in use and the dielectric causes insulated destruction partially. However, it is not in recovering by all cases. Especially, like the AC power supply, internal current may flow excessively at the time of self-recovery, the dielectric may be damaged, and insulation may not be recovered in a low impedance circuit.

2. Capacitor for AC power supplies.

The metallized plastic film capacitor has many strong points, and the use is also very wide in range. However, it can not be said that we may use it for all cases. In the case of a high frequency circuit etc., it appears as a result which is visible which generate heat immediately at the time of mistaking selection of a capacitor. However, the measure against surge voltage and the measure against corona are required for electromagnetic interference suppression of an AC power supply. It is also necessary to fully check reliability and safety to being exposed to the periods and these unfavorable conditions beyond the life of apparatus.

Moreover, a thunder stroke etc. is sometimes occurred. It is necessary to check such safety when receives these unusually. The recognition as "a special use" is required for the capacitor used for an AC power supply. A good idea for you is to use an overseas safety standard product as a standard of your selection.

3. Notes on use.

3.1 On circuitry.

- Please use it after checking use environment and fixing environment within the limits of the rated performance specified on the delivery specifications of the capacitor. (Please check especially the following clause)
- The temperature range to be used is in rating, including the condition for use and preservation. A capacitor carries out self-generation of heat when the power supply especially with high frequency. Moreover, when exothermic parts are in near, be careful also of overheating by radiant heat.

- Keep in mind that dielectric deteriorates by moisture absorption when more than 85%RH or the

continuation use under high humidity, such as dews.

- The voltage of the circuit to be used, such as AC, DC and a high frequency etc. is in rating. Please check that there is no influence in unusual self-generation of heat (self-generation of heat changes due to the voltage waveform or circumference temperature, please follow below 5deg. as a guide)
- If poor contact and the case of being unstable are in connection of a power supply system, a high voltage by resonance of sparks electric discharge may occur, please check.
- To satisfy characteristics, some capacitor's series are impregnated with oil.
  It may cause leakage oil from capacitor depending on usage environment.
  Quality of the capacitor is not affected by the leakage oil. When there is connector and/or relay near the capacitor, leakage oil may cause bad connection.
- As for special environment, as follows, please contact.
  a) The circuit where the huge surge voltage in repeating, rapid electric charge and discharge is repeated.
  b) The use which requires vibration and a shock continuously.
  c) Water, salt water, oil, etc. are in use.
  d) The use in plastics, such as chlorine, ammonia, and hydrogen sulfide, and the gas environment where metal is invaded.
  e) The use in the environment exposed to ozone, an ultraviolet ray, radiation, etc.

3.2 Attachment to apparatus.

- At the time of attachment, please do not make it damaged by the machine and the tool (solder is to be included), or do not add pressure from the exterior. (even when there are not degradation and change in appearance visually, inside may be damaged)
- When tensile strength and twist is added to the lead, please do not fix(with screw, soldering etc.) .
  A slack etc. may be happened in progress of time.
- Please do not apply the temperature more than regulation at the time of soldering. Heat degradation of the parts may be happened especially under the influence of pre-heating.
- When you apply solder to the land of a printed wiring board, please take sufficient solder portion. If inadequate, in a vibration in use and temperature change, a soldering part may deteriorate and it may become poor connection.
- Please do not carry out removing and re-using the product which already attached in the printed wiring board and was soldered to it at once. A slack in the lead wire under the influence of heat is dangerous when removing.
- When the capacitor is warmed, please do not apply external force.
- The washing process should carry out with the following cautions.
  a. Although the material strong against comparatively various washing is used, it may soften or may expand in washing of 60 degrees C or above. Please perform the coating after your check.
  b. There is also a possibility that a display will disappear, in ultrasonic washing or shower washing depending on conditions, please carry out after checking conditions.
  c. When the display surface is rubbed or mechanical power is applied during washing, the display may disappear, please terminate this action.

d. If the display surface is rubbed or mechanical power is applied immediately after washing and before detergent dries, the display may disappear, please terminate this action.

e. Please check before use an acetone, xylene, and a halogen system solvent.

- When you fix the parts with adhesives etc., please use it after confirm not giving distortion to the capacitor after the adhesives' hardening.
- When you use a solvent type with adhesives etc., please perform after your check there is no damage on the coating (dissolution, expand) by the solvent.
- Please do not impose power strong against the main part of the capacitor after fixing the capacitor to a printed wiring board or a terminal board. A slack may be happened in the lead wire due to this power, or the coating may be damaged.

3.3 Under use of apparatus and equipment

- If the terminal of a capacitor is touched, an electric shock will be happened during the flow of current. Moreover, if electricity is stored in the capacitor and even after turning off the switch of a power supply describes, an electric shock may be happened. Please touch after applying the resistance for electric discharge to the terminal of a capacitor and fully discharging, when touching the terminal of a capacitor.
- Please do not allow short-circuit between the terminals of a capacitor with an electric conduction object during the flow of current. A capacitor may deteriorate by rapid charge and discharge of electric.
- Please follow notes of clause 3.1 in this document.
- When receive a thunderstroke within a 500m radius of having used apparatus and equipment, please turn off the switch immediately and pull out the plug from the wall socket etc.

3.4 Scheduled Inspection

- Scheduled inspection should be performed after turn off the switch of apparatus and equipment, and after discharging completely of the capacitor. An electric shock may be happened if the electric charge still remains in the capacitor
- If damage or damage by flame, are seen in the coating side of a capacitor, please remove a capacitor and discuss with us.

3.5 In an emergency

- When emitting smoke, ignition, a nasty smell, unusual sound, etc. during use of apparatus and equipment, turn off the switch of apparatus and equipment immediately. Please pull out the plug from the wall socket etc.
- Place apparatus and equipment to the location with good ventilation, does not have combustibles, and please take the measure of required smoke eliminating and fire extinguishing.

3.6 Storage and conditions (before use)

- If it is kept in atmosphere with direct rays, dust, a rapid temperature change, and corrosive gas, and places, with heat and high humidity, degradation of the characteristic may take place.

- Please use it after checking the characteristic and soldering nature of those left for more than one year.

- Please do not apply too much shock and external force to a capacitor. (even when there are not degradation and change in appearance visually, inside may be damaged)
- Be aware of clause 3.1. c, d, and e in this document.

3.7 Wastage.

- A capacitor is classified into industrial waste. Please discard by the disposal plant and processing contractor who received the approval specified by the government ordinance.
- Incineration of a capacitor may generate detrimental gas.
- If a capacitor is exposed outdoors to a rainstorm, underground, groundwater, and river contamination may be caused, please do not carry out.

3.8 The matter without publication is based on the "Guideline of notabilia for fixed plastic film capacitors for use in electronic equipment" (EIAJ RCR-2350B) published by Japan Electronics and Information Technology Industries Association.

※ Client consultation: Okaya Electric Ind. Co., Ltd.
Capacitor Dept.
TEL : +81-266-22-3611
FAX : +81-266-22-6840