信 昌 電 子 陶 瓷 股 份 有 限 公 司
PROSPERITY DIELECTRICS CO., LTD.

# SPECIFICATION FOR APPROVAL

| | |
|---|---|
| CUSTOMER | |
| CUST. PART NO. | |
| CUST. DOC. REV. | |
| DESCRIPTION | POWER CHOKE(RoHS+H.F.) |
| SAMPLE LOT NO. | |
| PART NO. | CSMS0628D-XXXX-LRH |
| DOC. REV. | |
| DATE | |



**Once you approve this part, please sign and return this page to the following marked location.**

**Customer Signature:_____ Date:_____**

☐This part currently development section.

☐Production line can produce this series of products.

■Sales Office-Headquarter
No. 566-1, Kao-Shi Rd., Yangmei, Taoyuan 32668, Taiwan
TEL: +886-3-475-3355
FAX: +886-3-485-4959

☐Yong Zhou Plant
Tao-Yuan Rd., Fenghuang Park, Lengshuitan District, Yongzhou, Hunan 425000, P.R.C.
TEL: +86-746-8610-180
FAX: +86-746-8610-181

☐Sales Office-Dong Guan,China
No.638,Mei Jing West Road Xiniupo Administrative Zone Dalang Town,Dong Guan City,GuangDong Province,China.
TEL: +86-769-8555-0979
FAX: +86-769-8555-0972

| TESTED BY | CHECKED BY | APPROVED BY |
|---|---|---|
| | | |

# TABLE OF CONTENTS

**INDEX** **Page**

# SPECIFICATION FOR APPROVAL

| CUSTOMER | CUSTOMER P/N | REV. | SPL. LOT NO. | |
|---|---|---|---|---|
| | | - | | |
| PART NAME | PART NO. | REV. | DATE OF ISSUE | Q'TY |
| POWER CHOKE (ROHS+H.F.) | CSMS0628D-XXXX-LRH | | | 0 PCS |

## ENGINEERING CHANGE NOTICE - RECORD

| REVISION NO. | REVISION DESCRIPTION | AUTHOR | DATE | REMARK |
|---|---|---|---|---|
| | | | | |

# SPECIFICATION FOR APPROVAL

**※This is a RoHS and REACH compliant product whose related documents are available on request.**
**※Graphic is only for dimensionally application.**

**1. Range of application:**

This specifications are applied to SMD Power Inductor,CSMS0628D.

**2. Ordering code:**

Example: **CSMS** **0628** **D** - **2R2** **M** - □ □ □ □

**(1) (2) (3) (4) (5) (6) (7)**

(1) Product Type
(2) External dimensions
(3) Solder Type
(4) Inductance
(5) Inductance tolerance
(6) Green product code
(7) Internal Code

**3. Mechanical Dimension:**

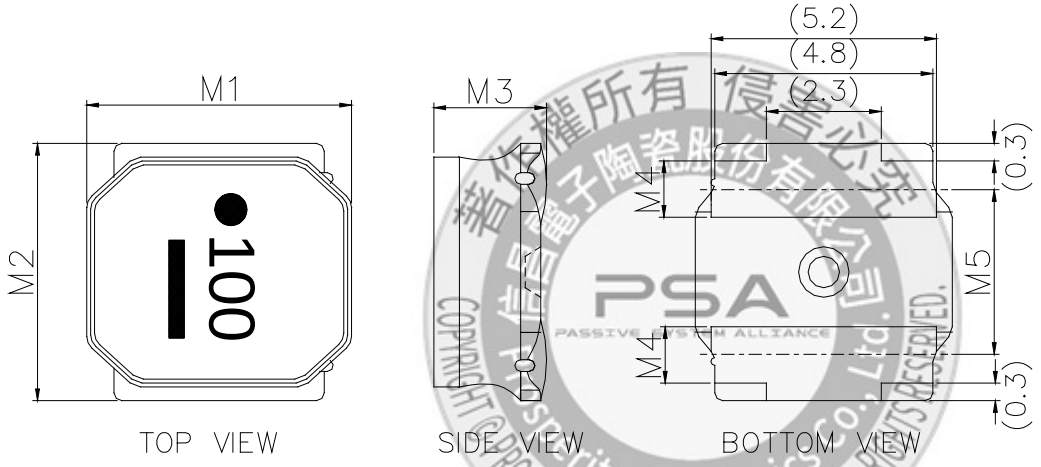


( ): Reference value

**UNIT : mm**

| | DIM. | TOL. |
|---|---|---|
| M1 | 6.0 | ±0.2 |
| M2 | 6.0 | ±0.2 |
| M3 | 2.8 | MAX. |
| M4 | 1.35 | ±0.2 |
| M5 | 4.0 | ±0.2 |



**4. Recommended Land-Pattern(UNIT:mm):**

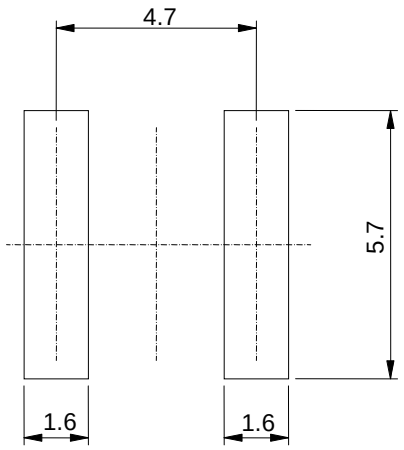

# SPECIFICATION FOR APPROVAL

## 5. Electrical Characteristics:

| Part number | Nominal Inductance (uH) @100KHz | Inductance Tolerance | DC Resistance (Ω) ±30% | Rated Current (mA) | | Self-resonant Frequency Min (MHz) |
|---|---|---|---|---|---|---|
| | | | | Saturation Current Idc1 | Temperature Rise Current Idc2 | |
| CSMS0628D-R90N-LRH | 0.9 | ±30% | 0.013 | 6700 | 4600 | 90 |
| CSMS0628D-1R5N-LRH | 1.5 | ±30% | 0.016 | 5100 | 4200 | 78 |
| CSMS0628D-2R2N-LRH | 2.2 | ±30% | 0.020 | 4200 | 3700 | 68 |
| CSMS0628D-3R0N-LRH | 3.0 | ±30% | 0.023 | 3600 | 3400 | 55 |
| CSMS0628D-4R7M-LRH | 4.7 | ±20% | 0.031 | 2700 | 3000 | 39 |
| CSMS0628D-6R0M-LRH | 6.0 | ±20% | 0.040 | 2500 | 2500 | 30 |
| CSMS0628D-100M-LRH | 10 | ±20% | 0.065 | 1900 | 1900 | 20 |
| CSMS0628D-150M-LRH | 15 | ±20% | 0.095 | 1600 | 1800 | 17 |
| CSMS0628D-220M-LRH | 22 | ±20% | 0.135 | 1300 | 1400 | 12 |
| CSMS0628D-330M-LRH | 33 | ±20% | 0.220 | 1100 | 1100 | 10 |
| CSMS0628D-470M-LRH | 47 | ±20% | 0.300 | 1000 | 920 | 8 |
| CSMS0628D-680M-LRH | 68 | ±20% | 0.420 | 800 | 770 | 5 |
| CSMS0628D-101M-LRH | 100 | ±20% | 0.600 | 650 | 660 | 3 |

1. Test Frequency: 100KHz
2. Test Equipment:
   Inductance: Chroma3302+1320+16502. or equivalent.
   DCR: Chroma16502 or equivalent.
   SRF: HP4291B or equivalent.
3. Saturation Current Idc1: The value of current causes a 30% inductance reduction from initial value.
4. Temperature rise current Idc2: The value of current causes a 40℃ temperature rise.
5. Rated Current: Either Idc1 or Idc2 whichever is smaller.
6. Operating Temperature Range:-25℃ to +125℃ (Including self-temperature rise)
7. Storage Temp. Range：-40℃ to +85℃
8. MSL：Level 1



## 6. Structural Drawing:

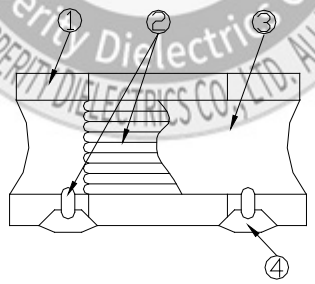


(Magnetic Shielded Type)

| | | |
|---|---|---|
| ① Ferrite core. | Ni-Zn ferrite | |
| ② Winding wire | Polyurethane-copper wire | |
| ③ Over-coating resin. | Epoxy resin, containing ferrite powder | |
| ④ Electrode | External electrode (substrate) | Ag |
| | External electrode (base plating) | Ni-Sn |
| | External electrode (top surface solder coating) | Sn-Ag-Cu |

# SPECIFICATION FOR APPROVAL

**7. Electrical Curve：**

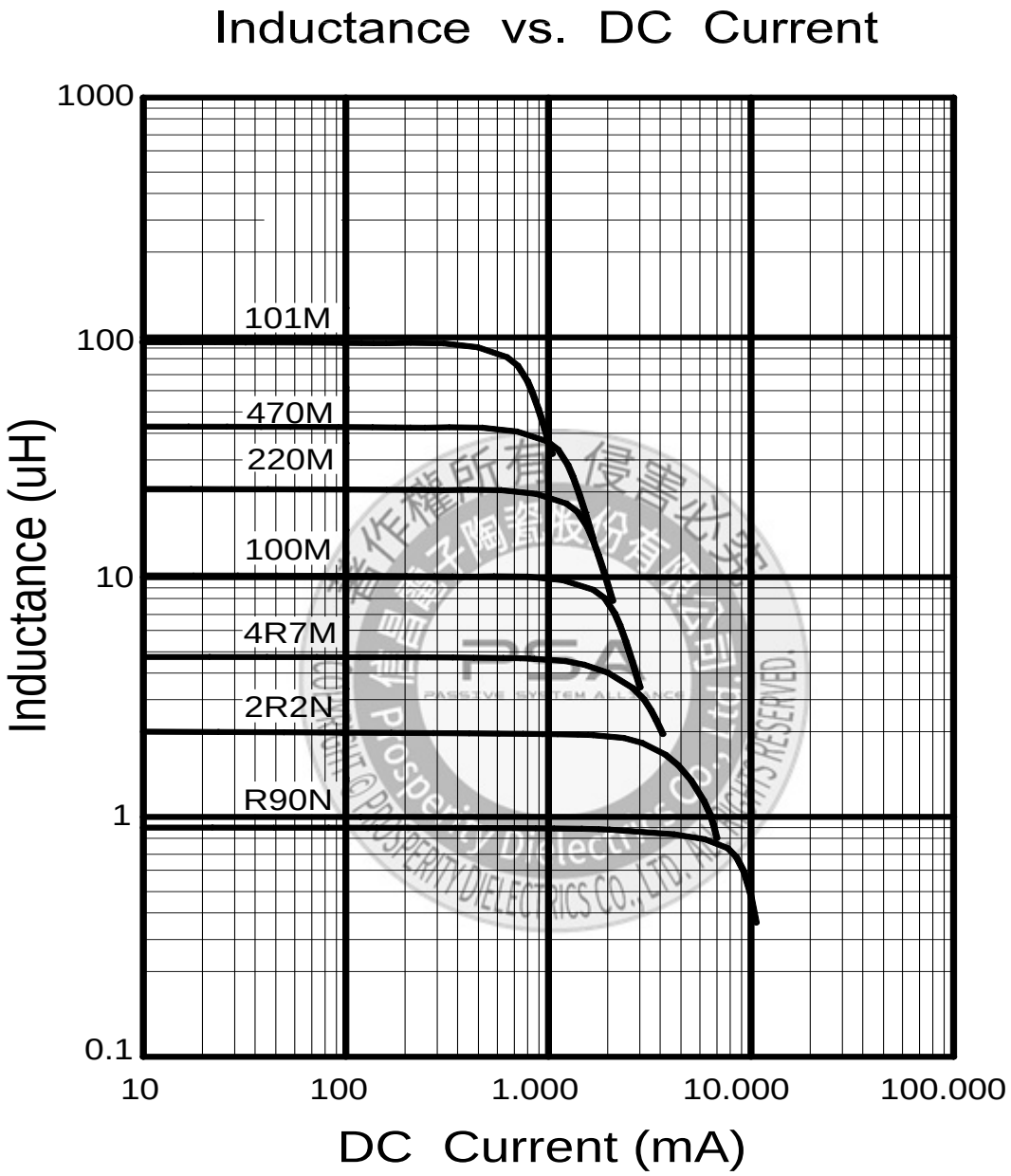

# SPECIFICATION FOR APPROVAL

**8. Core Chipping:**

The appearance standard of the chipping size in top side, of bottom side ferrite Core is following dimension

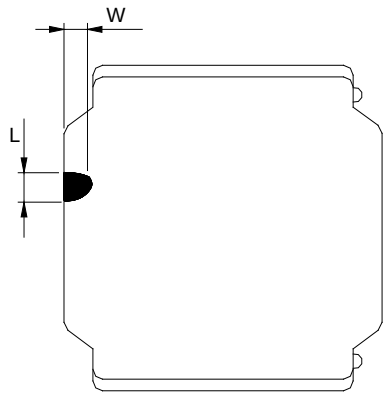


| L | W |
|---|---|
| 1.5mmMax. | 1.5mmMax. |

**9. Exposed wire tolerance limit of coating resin part on product side**
**Size of exposed wire occurring to coating resin is specified below.**

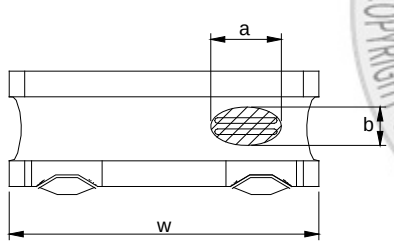


① Width direction (dimension a): Acceptable when a<=w/2
Nonconforming when a>w/2
② Length direction (dimension b): Dimension b is not specified.
③ When total area of exposed wire occurring to each sides is not greater than 50% of coating resin area, that is acceptable.

# SPECIFICATION FOR APPROVAL

**10. Reflow Profile Chart (Reference):**

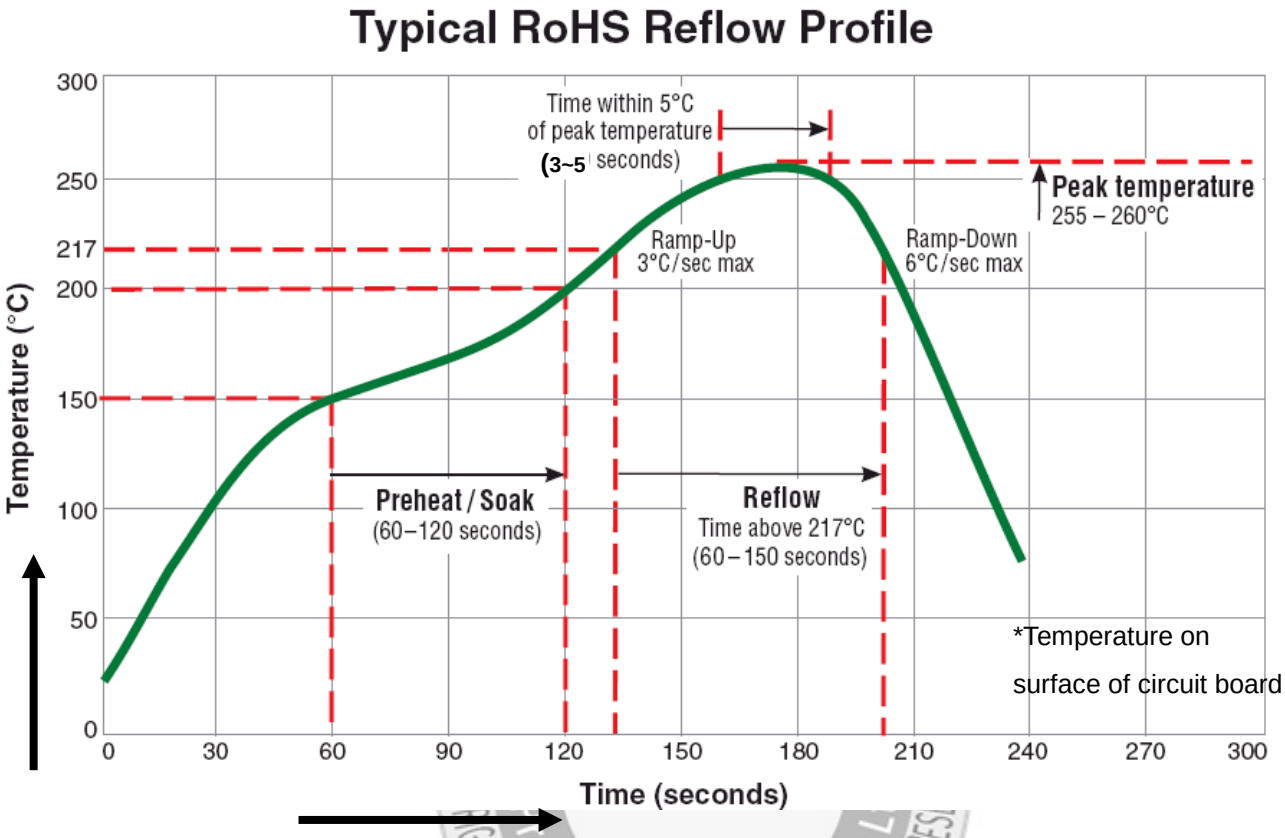


**(Table 1)**

**The products may be exposed to reflow soldering process of above profile up to two times.**

# SPECIFICATION FOR APPROVAL

**11. Mechanical Performance /Environmental Test Performance Specifications:**

| | Test Item | Standard | Test method |
|---|---|---|---|
| MECHANICAL CHARACTERISTICS | Resistance to Deflection | No damage. | The test samples shall be soldered to the test board by the reflow soldering conditions show in Table 1.<br>As illustrated below, apply force in the direction of the Arrow indicating until deflection of the test board Reaches to 2 mm.<br> 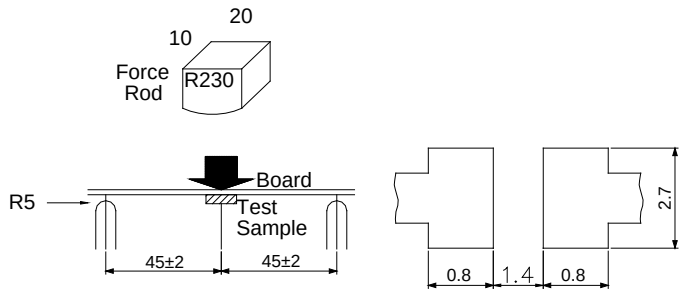 <br><br>Land dimensions<br>Test board size :100×40×10<br>Test board material l: glass epoxy-resin<br>Solder cream thickness:0.1 Unit: mm |
| | Adhesion of Terminal Electrode | Shall not come off PC board | The test samples shall be soldered to the test board By the reflow soldering conditions shown in Table 1.<br> 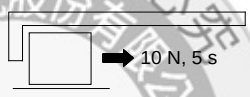 <br><br>Applied force:10 N to X and Y directions<br>Duration:5 s.<br>Solder cream thickness:0.1 mm<br>(Refer to recommended Land Pattern Dimensions Defined in “Precaution”) |
| | Body strength | No damage | Applied force :20 N<br>Duration :10 s<br> 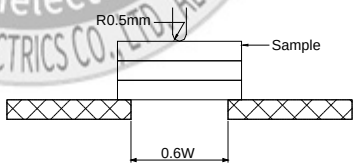 <br> |

# SPECIFICATION FOR APPROVAL

<table>
<tr><th></th><th>Test Item</th><th>Standard</th><th>Test method</th></tr>
<tr><td></td><td>Resistance to Vibration</td><td>△L/L:within±10%<br>No abnormality observed<br>In appearance</td><td>The test samples shall be soldered to the test board by<br>The reflow soldering conditions shown in Table 1.Then<br>It shall be submitted to below test conditions
<table>
<tr><td>Frequency range</td><td>10Hz~55Hz</td></tr>
<tr><td>Total Amplitude</td><td>1.5mm(May not exceed acceleration 196 m/S$^2$)</td></tr>
<tr><td>Sweeping Method</td><td>10Hz to 55Hz to 10 Hz for 1 min.</td></tr>
<tr><td>Time</td><td>For 2 hours on each X,Y, and Z axis.</td></tr>
</table></td></tr>
<tr><td></td><td>Resistance to Soldering heat (Reflow)</td><td>△L/L:within±10%<br>No abnormality observed<br>In appearance</td><td>The test sample shall be exposed to reflow oven at<br>230±5 deg C for 40 seconds, with peak temperature at<br>260±5 deg C for 5 seconds, 2 times.<br><br>Test board thickness:1.0 mm<br>Test board material :glass epoxy-resin</td></tr>
<tr><td></td><td>Solder ability</td><td>At least 90% of surface of terminal electrode is covered by new solder.</td><td>The test samples shall be dipped in flux, and then<br>Immersed in molten solder as shown in below table.<br>Flux: Methanol solution containing rosin 25%
<table>
<tr><td>Solder Temperature</td><td>245±deg C</td></tr>
<tr><td>Time</td><td>5±1.0 S.</td></tr>
<tr><td>Immersing Speed</td><td>25 mm/s</td></tr>
</table></td></tr>
<tr><td></td><td>Temperature Characteristics</td><td>△L/L:within±20%<br>No abnormality observed<br>In appearance</td><td>Measurement of inductance shall be taken at temperature<br>Range within -25 deg C to +85 deg C.<br>With reference to inductance value at +20 deg C, change<br>Rate shall be calculated.</td></tr>
<tr><td></td><td>Thermal shock</td><td>△L/L:within±10%<br>No abnormality observed<br>In appearance</td><td>The test samples shall be soldered to test board<br>By the reflow soldering conditions shown in Table 1.<br>The test samples shall be placed at specified<br>Shown in below table in sequence.<br>The temperature cycle shall be repeated 100 cycles.<br><br>Conditions of steps for 1 cycle
<table>
<tr><th>Step</th><th>Temperature</th><th>Time(min)</th></tr>
<tr><td>1</td><td>-40±3 deg C</td><td>30±3</td></tr>
<tr><td>2</td><td>Room Temp</td><td>3 maximum</td></tr>
<tr><td>3</td><td>85±2 deg C</td><td>30±3</td></tr>
<tr><td>4</td><td>Room Temp</td><td>3 maximum</td></tr>
</table></td></tr>
<tr><td></td><td>Low Temperature life Test</td><td>△L/L:within±10%<br>No abnormality observed<br>In appearance</td><td>The test samples shall be soldered to the test board by<br>The reflow soldering conditions shown in Table 1.<br>After that, the test samples shall be placed at test<br>Conditions as shown in below table.
<table>
<tr><td>Temperature</td><td>-40±2 deg C</td></tr>
<tr><td>Time</td><td>500 +24/-0 h</td></tr>
</table></td></tr>
</table>

# SPECIFICATION FOR APPROVAL

<table>
<tr><th></th><th>Test Item</th><th>Standard</th><th>Test method</th></tr>
<tr><td rowspan="3">ENVIRONMENT TESTS</td><td>Loading at high temperature life test</td><td>△L/L:within±10%<br>No abnormality observed in appearance.</td><td>The test samples shall be soldered to the test board by the reflow soldering conditions shown in Table 1.<br>The test samples shall be placed in thermostatic oven set at specified temperature and applied the rated current continuously as shown in below table.<br><table><tr><td>Temperature</td><td>85±2 deg C</td></tr><tr><td>Applied current</td><td>Rated current<br>(Refer to Page 2)</td></tr><tr><td>Time</td><td>500+24/-0 h</td></tr></table></td></tr>
<tr><td>Damp heat life test</td><td>△L/L:within±10%<br>No abnormality observed<br>in appearance.</td><td>The test samples shall be soldered to the test board by the reflow soldering conditions shown in Table 1.<br>The test samples shall be placed in thermostatic oven set at specified temperature and humidity as shown in below table.<br><table><tr><td>Temperature</td><td>60±2 deg C</td></tr><tr><td>Humidity</td><td>90~95%RH</td></tr><tr><td>Time</td><td>500+24/-0 h</td></tr></table></td></tr>
<tr><td>Loading under Damp heat life test</td><td>△L/L:within±10%<br>No abnormality observed<br>in appearance.</td><td>The test samples shall be soldered to the test board by the reflow soldering conditions shown in Table 1.<br>The test samples shall be placed in thermostatic oven set at specified temperature and humidity and applied the rated current continuously as shown in below table.<br><table><tr><td>Temperature</td><td>60±2 deg C</td></tr><tr><td>Humidity</td><td>90~95%RH</td></tr><tr><td>Applied current</td><td>Rated current<br>(Refer to Page 2))</td></tr><tr><td>Time</td><td>500+24/-0 h</td></tr></table></td></tr>
</table>

# SPECIFICATION FOR APPROVAL

**12. Tape & Reel Packaging Dimensions:**

**12-1 Dimensions** Unit: mm

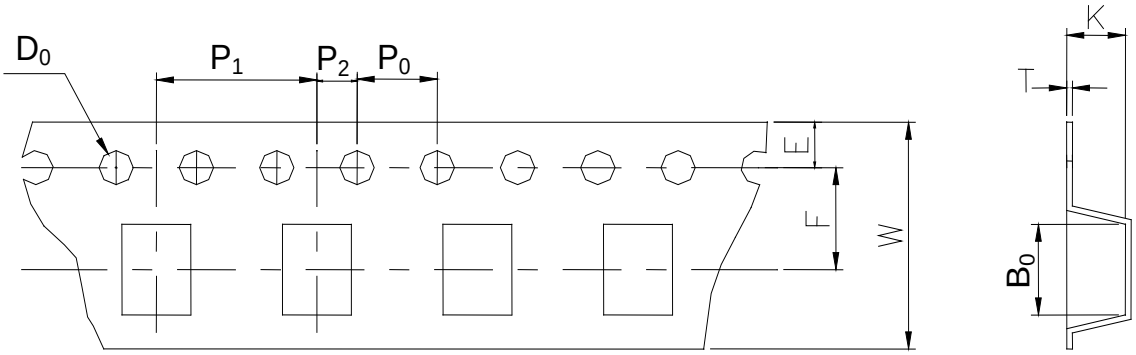


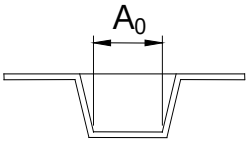


| $A_0$ | $B_0$ | W | F | E | $P_1$ | $P_2$ | $P_0$ | $D_0$ | T | K |
|---|---|---|---|---|---|---|---|---|---|---|
| 6.30 ±0.1 | 6.30 ±0.1 | 12.0 ±0.3 | 5.5 ±0.1 | 1.75 ±0.1 | 8.0 ±0.1 | 2.0 ±0.1 | 4.0 ±0.1 | Φ1.5 +0.1 -0 | 0.40 ±0.1 | 3.10 ±0.1 |



**12-2 Direction of rolling**

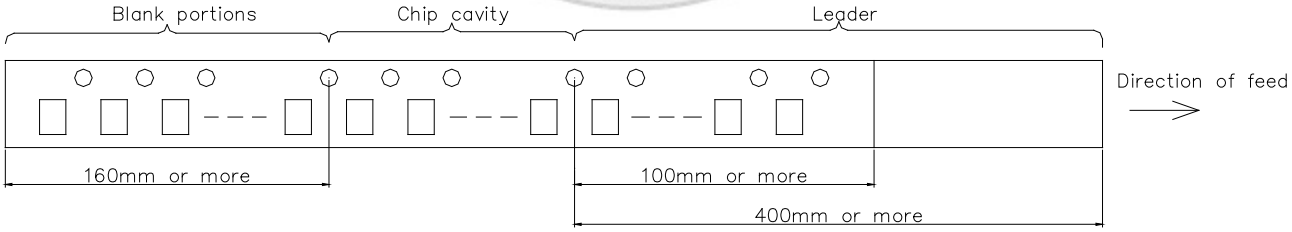


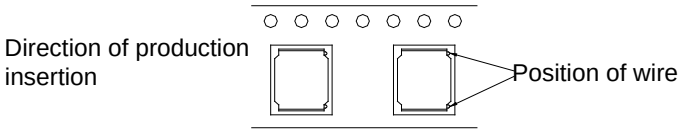

**12-3 Reel**

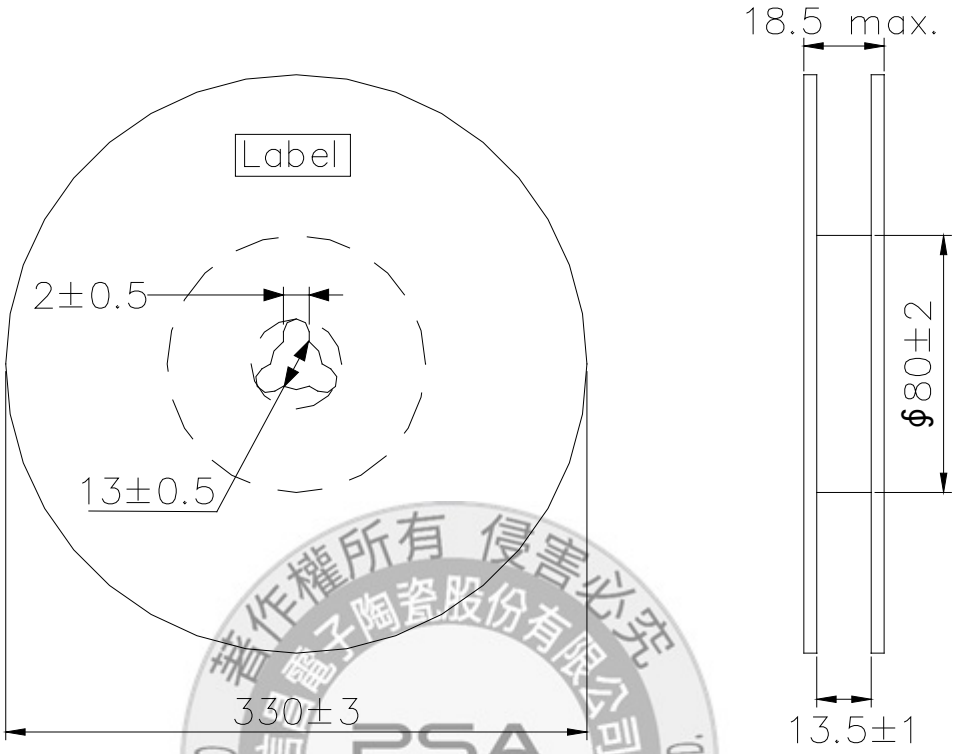


**Label position: on the opposite side of sprocket holes side of reel**



**12-4 Top tape strength**

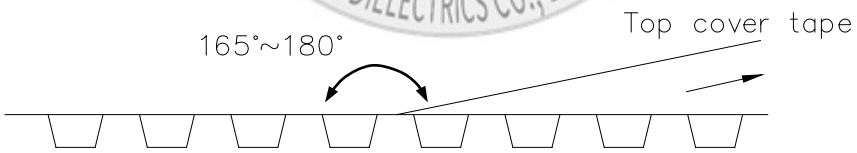


Peel-off strength: 0.1N~1.3N

Peel-off angle:165°~180°

Peel-off speed: 300mm/mm

**12-5 Dimensions of packing box (for Tape & Reel package)**

UNIT : mm

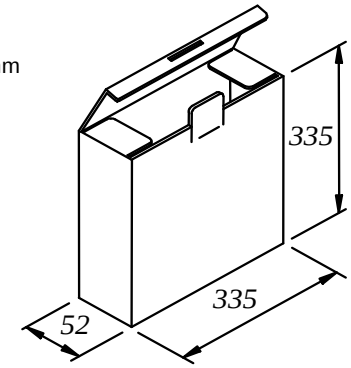


CONSTURCTION:
THE CASE CONTAINS 2-12mm WIDE CARRIER TAPES.
Q'TY : 2,000/ REEL



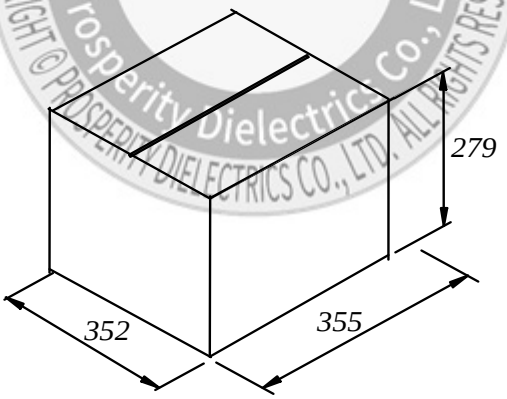


TOTAL Q'TY : 24,000 PCS