信 昌 電 子 陶 瓷 股 份 有 限 公 司
PROSPERITY DIELECTRICS CO., LTD.

SPECIFICATION FOR APPROVAL

CUSTOMER	
CUST. PART NO.	
CUST. DOC. REV.	
DESCRIPTION	POWER CHOKE(RoHS+H.F.)
SAMPLE LOT NO.	
PART NO.	CSMS0840D-XXXX-LRH
DOC. REV.	
DATE	

Once you approve this part, please sign and return this page to the following marked location.

Customer Signature:_____ Date:_____

☐This part currently development section.

☐Production line can produce this series of products.

■Sales Office-Headquarter
No. 566-1, Kao-Shi Rd., Yangmei, Taoyuan 32668, Taiwan
TEL: +886-3-475-3355
FAX: +886-3-485-4959

☐Yong Zhou Plant
Tao-Yuan Rd., Fenghuang Park, Lengshuitan District, Yongzhou, Hunan 425000, P.R.C.
TEL: +86-746-8610-180
FAX: +86-746-8610-181

☐Sales Office-Dong Guan,China
No.638,Mei Jing West Road Xiniupo Administrative Zone Dalang Town,Dong Guan City,GuangDong Province,China.
TEL: +86-769-8555-0979
FAX: +86-769-8555-0972

TESTED BY	CHECKED BY	APPROVED BY

TABLE OF CONTENTS

INDEX **Page**

SPECIFICATION FOR APPROVAL

CUSTOMER	CUSTOMER P/N	REV.	SPL. LOT NO.	
		—		
PART NAME	PART NO.	REV.	DATE OF ISSUE	Q'TY
POWER CHOKE (ROHS+H.F.)	CSMS0840D-XXXX-LRH			0 PCS

ENGINEERING CHANGE NOTICE - RECORD

REVISION NO.	REVISION DESCRIPTION	AUTHOR	DATE	REMARK

SPECIFICATION FOR APPROVAL

※This is a RoHS and REACH compliant product whose related documents are available on request.
※Graphic is only for dimensionally application.

1. Range of application:

This specifications are applied to SMD Power Inductor,CSMS0840D.

2. Ordering code:

Example: **CSMS** **0840** **D** - **XXX** **M** - □ □ □ □

(1) **(2)** **(3)** **(4)** **(5)** **(6)** **(7)**

(1) Product Type
(2) External dimensions
(3) Solder Type
(4) Inductance
(5) Inductance tolerance
(6) Green product code
(7) Internal Code

3. Mechanical Dimension:

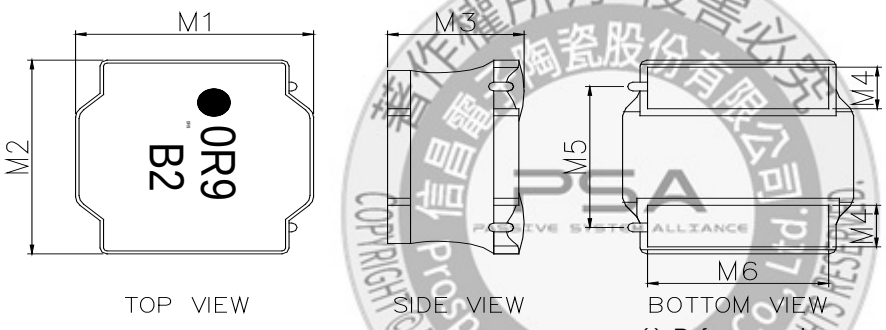

( ): Reference value

UNIT : mm

	DIM.	TOL.
M1	8.0	±0.2
M2	8.0	±0.2
M3	4.2	MAX.
	R90N~6R8N	
M3	4.0	MAX.
	100M~220M	
M4	1.6	±0.3
M5	5.6	±0.3
M6	5.5	±0.3

4. Recommended Land-Pattern:

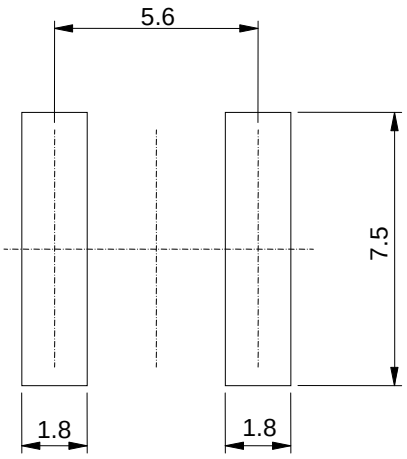

(UNIT: mm)

SPECIFICATION FOR APPROVAL

5. Electrical Characteristics:

Part number	Nominal Inductance (uH) @100KHz	Inductance Tolerance	DC Resistance (Ω) ±20%	Rated Current (mA)		Self-resonant Frequency Min (MHz)
				Saturation Current Idc1	Temperature Rise Current Idc2	
CSMS0840D-R90N-LRH	0.9	±30%	0.006	13000	7800	85
CSMS0840D-1R4N-LRH	1.4	±30%	0.007	10000	7000	63
CSMS0840D-2R0N-LRH	2.0	±30%	0.009	8100	6300	50
CSMS0840D-3R6N-LRH	3.6	±30%	0.015	6400	4900	34
CSMS0840D-4R7N-LRH	4.7	±30%	0.018	5400	4100	30
CSMS0840D-6R8N-LRH	6.8	±30%	0.025	4400	3700	24
CSMS0840D-100M-LRH	10	±20%	0.034	3800	3100	22
CSMS0840D-150M-LRH	15	±20%	0.050	2900	2400	16
CSMS0840D-220M-LRH	22	±20%	0.066	2400	2200	13
CSMS0840D-330M-LRH	33	±20%	0.100	2000	1700	12
CSMS0840D-470M-LRH	47	±20%	0.140	1500	1500	8
CSMS0840D-101M-LRH	100	±20%	0.280	1100	1000	6

1. Test Frequency: 100KHz
2. Test Equipment:
   Inductance: Chroma3302+1320+16502. or equivalent.
   DCR: Chroma16502 or equivalent.
   SRF: HP4291B or equivalent.
3. Saturation Current Idc1: The value of current causes a 30% inductance reduction from initial value.
4. Temperature rise current Idc2: The value of current causes a 40℃ temperature rise.
5. Rated Current: Either Idc1 or Idc2 whichever is smaller.
6. Operating Temperature Range:-25℃ to +125℃ (Including self-temperature rise)
7. Storage Temp. Range：-40℃ to +85℃
8. MSL：Level 1

6. Structural Drawing:

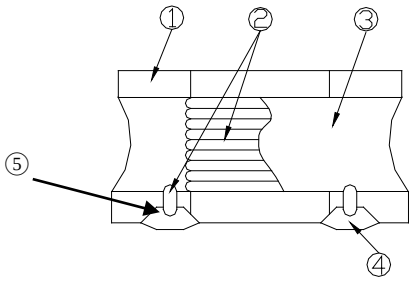

(Magnetic Shielded Type)

① Ferrite core.	Ni-Zn ferrite
② Winding wire	Polyurethane-copper wire
③ Over-coating resin.	Epoxy resin, containing ferrite powder
④ External electrode	Sn-Ag-Cu
⑤ Base plating	Phosphor Bronze (using the Epoxy adhesive)

SPECIFICATION FOR APPROVAL

7. Electrical Curve：

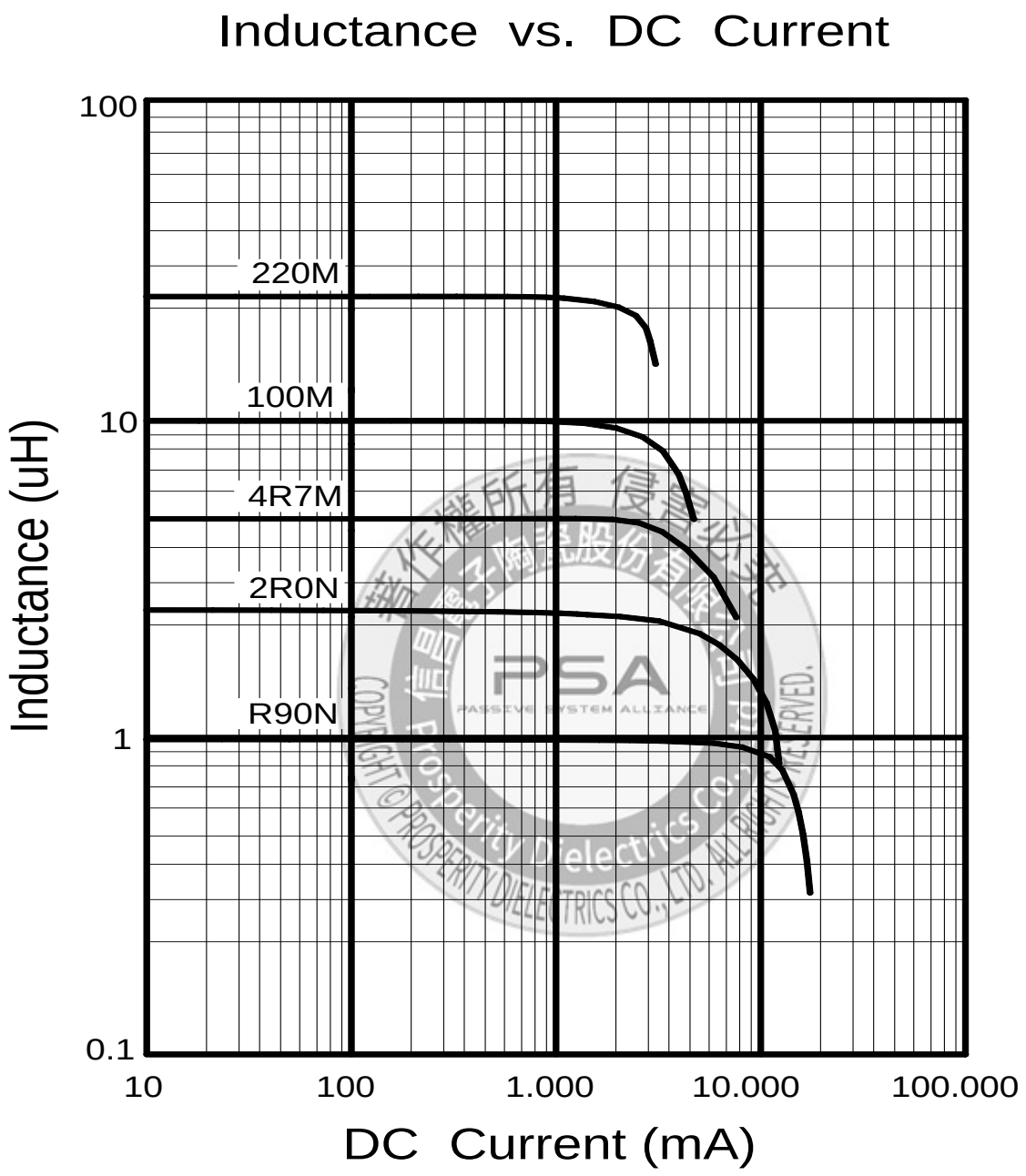

SPECIFICATION FOR APPROVAL

8. Core Chipping:

The appearance standard of the chipping size in top side, of bottom side ferrite Core is following dimension

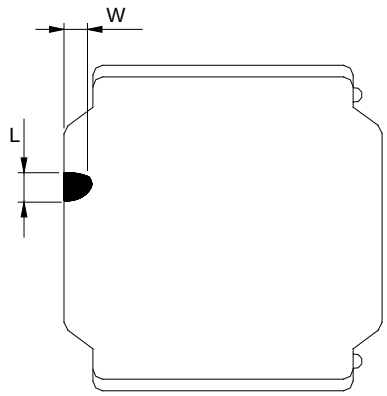

L	W
2.0mmMax.	2.0mmMax.

9. Exposed wire tolerance limit of coating resin part on product side
Size of exposed wire occurring to coating resin is specified below.

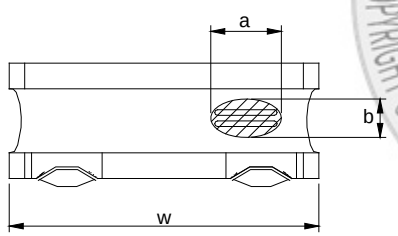

① Width direction (dimension a): Acceptable when a<=w/2
Nonconforming when a>w/2
② Length direction (dimension b): Dimension b is not specified.
③ When total area of exposed wire occurring to each sides is not greater than 50% of coating resin area, that is acceptable.

SPECIFICATION FOR APPROVAL

10. Reflow Profile Chart (Reference):

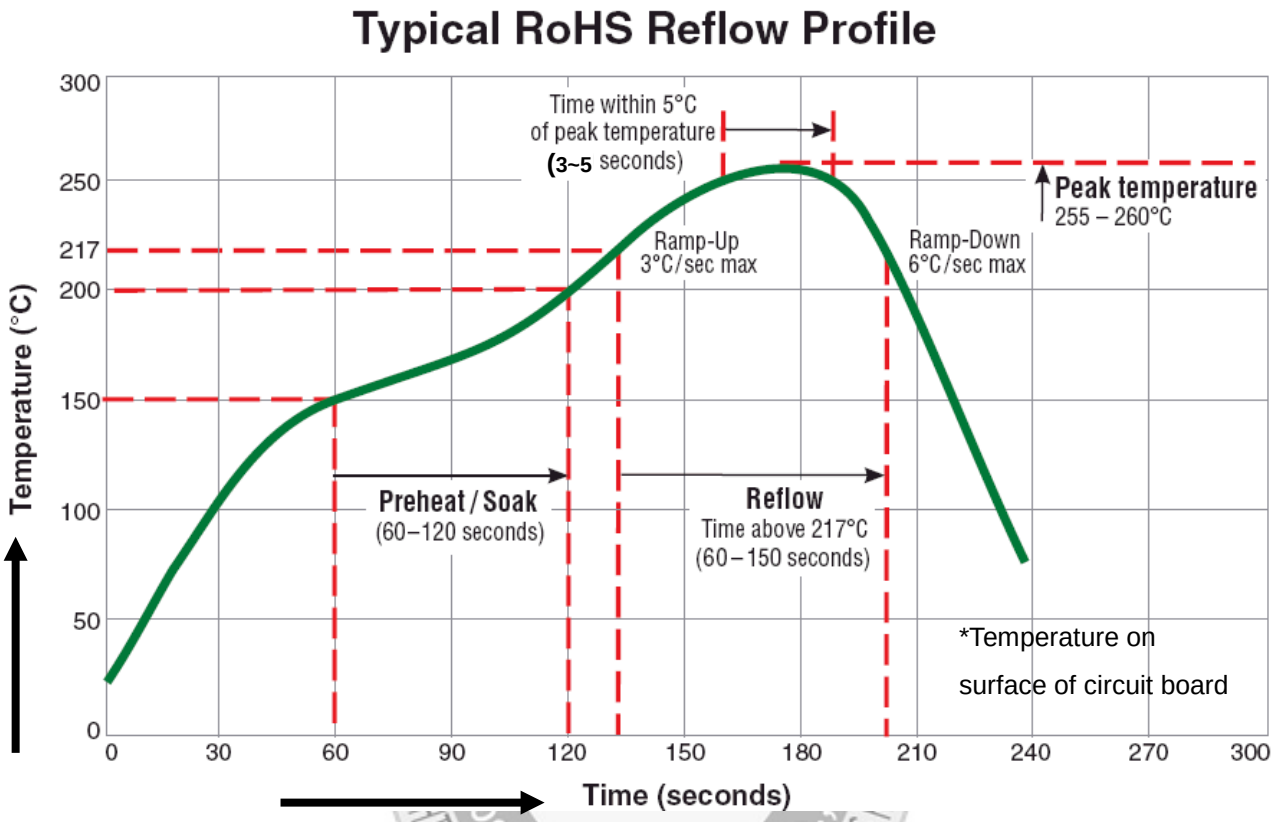

(Table 1)

The products may be exposed to reflow soldering process of above profile up to two times.

SPECIFICATION FOR APPROVAL

11. Mechanical Performance /Environmental Test Performance Specifications:

	Test Item	Standard	Test method
MECHANICAL CHARACTERISTICS	Resistance to Deflection	No damage.	The test samples shall be soldered to the test board by the reflow soldering conditions show in Table 1. As illustrated below, apply force in the direction of the Arrow indicating until deflection of the test board Reaches to 2 mm. 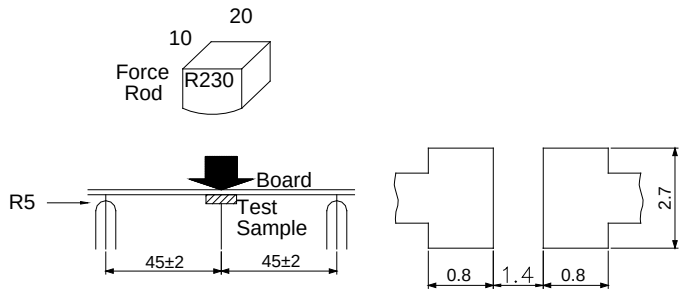 Land dimensions Test board size :100×40×10 Test board material l: glass epoxy-resin Solder cream thickness:0.1 Unit: mm
	Adhesion of Terminal Electrode	Shall not come off PC board	The test samples shall be soldered to the test board By the reflow soldering conditions shown in Table 1.  Applied force:10 N to X and Y directions Duration:5 s. Solder cream thickness:0.1 mm (Refer to recommended Land Pattern Dimensions Defined in “Precaution”)
	Body strength	No damage	Applied force :20 N Duration :10 s 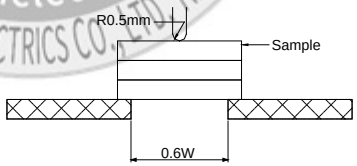

SPECIFICATION FOR APPROVAL

<table>
<tr><th></th><th>Test Item</th><th>Standard</th><th>Test method</th></tr>
<tr><td></td><td>Resistance to Vibration</td><td>△L/L:within±10%
No abnormality observed
In appearance</td><td>The test samples shall be soldered to the test board by
The reflow soldering conditions shown in Table 1.Then
It shall be submitted to below test conditions
<table>
<tr><td>Frequency range</td><td>10Hz~55Hz</td></tr>
<tr><td>Total Amplitude</td><td>1.5mm(May not exceed acceleration 196 m/S^2)</td></tr>
<tr><td>Sweeping Method</td><td>10Hz to 55Hz to 10 Hz for 1 min.</td></tr>
<tr><td>Time</td><td>For 2 hours on each X,Y, and Z axis.</td></tr>
</table></td></tr>
<tr><td></td><td>Resistance to Soldering heat (Reflow)</td><td>△L/L:within±10%
No abnormality observed
In appearance</td><td>The test sample shall be exposed to reflow oven at
230±5 deg C for 40 seconds, with peak temperature at
260±5 deg C for 5 seconds, 2 times.

Test board thickness:1.0 mm
Test board material :glass epoxy-resin</td></tr>
<tr><td></td><td>Solder ability</td><td>At least 90% of surface of terminal electrode is covered by new solder.</td><td>The test samples shall be dipped in flux, and then
Immersed in molten solder as shown in below table.
Flux: Methanol solution containing rosin 25%
<table>
<tr><td>Solder Temperature</td><td>245±deg C</td></tr>
<tr><td>Time</td><td>5±1.0 S.</td></tr>
<tr><td>Immersing Speed</td><td>25 mm/s</td></tr>
</table></td></tr>
<tr><td></td><td>Temperature Characteristics</td><td>△L/L:within±20%
No abnormality observed
In appearance</td><td>Measurement of inductance shall be taken at temperature
Range within -25 deg C to +85 deg C.
With reference to inductance value at +20 deg C, change
Rate shall be calculated.</td></tr>
<tr><td></td><td>Thermal shock</td><td>△L/L:within±10%
No abnormality observed
In appearance</td><td>The test samples shall be soldered to test board
By the reflow soldering conditions shown in Table 1.
The test samples shall be placed at specified
Shown in below table in sequence.
The temperature cycle shall be repeated 100 cycles.

Conditions of steps for 1 cycle
<table>
<tr><th>Step</th><th>Temperature</th><th>Time(min)</th></tr>
<tr><td>1</td><td>-40±3 deg C</td><td>30±3</td></tr>
<tr><td>2</td><td>Room Temp</td><td>3 maximum</td></tr>
<tr><td>3</td><td>85±2 deg C</td><td>30±3</td></tr>
<tr><td>4</td><td>Room Temp</td><td>3 maximum</td></tr>
</table></td></tr>
<tr><td></td><td>Low Temperature life Test</td><td>△L/L:within±10%
No abnormality observed
In appearance</td><td>The test samples shall be soldered to the test board by
The reflow soldering conditions shown in Table 1.
After that, the test samples shall be placed at test
Conditions as shown in below table.
<table>
<tr><td>Temperature</td><td>-40±2 deg C</td></tr>
<tr><td>Time</td><td>500 +24/-0 h</td></tr>
</table></td></tr>
</table>

SPECIFICATION FOR APPROVAL

<table>
<tr><th></th><th>Test Item</th><th>Standard</th><th>Test method</th></tr>
<tr><td rowspan="3">ENVIRONMENT TESTS</td><td>Loading at high temperature life test</td><td>△L/L:within±10%
No abnormality observed in appearance.</td><td>The test samples shall be soldered to the test board by the reflow soldering conditions shown in Table 1.
The test samples shall be placed in thermostatic oven set at specified temperature and applied the rated current continuously as shown in below table.
<table><tr><td>Temperature</td><td>85±2 deg C</td></tr><tr><td>Applied current</td><td>Rated current
(Refer to Page 2)</td></tr><tr><td>Time</td><td>500+24/-0 h</td></tr></table></td></tr>
<tr><td>Damp heat life test</td><td>△L/L:within±10%
No abnormality observed
in appearance.</td><td>The test samples shall be soldered to the test board by the reflow soldering conditions shown in Table 1.
The test samples shall be placed in thermostatic oven set at specified temperature and humidity as shown in below table.
<table><tr><td>Temperature</td><td>60±2 deg C</td></tr><tr><td>Humidity</td><td>90~95%RH</td></tr><tr><td>Time</td><td>500+24/-0 h</td></tr></table></td></tr>
<tr><td>Loading under Damp heat life test</td><td>△L/L:within±10%
No abnormality observed
in appearance.</td><td>The test samples shall be soldered to the test board by the reflow soldering conditions shown in Table 1.
The test samples shall be placed in thermostatic oven set at specified temperature and humidity and applied the rated current continuously as shown in below table.
<table><tr><td>Temperature</td><td>60±2 deg C</td></tr><tr><td>Humidity</td><td>90~95%RH</td></tr><tr><td>Applied current</td><td>Rated current
(Refer to Page 2))</td></tr><tr><td>Time</td><td>500+24/-0 h</td></tr></table></td></tr>
</table>

SPECIFICATION FOR APPROVAL

12. Tape & Reel Packaging Dimensions:

12-1 Dimensions Unit: mm

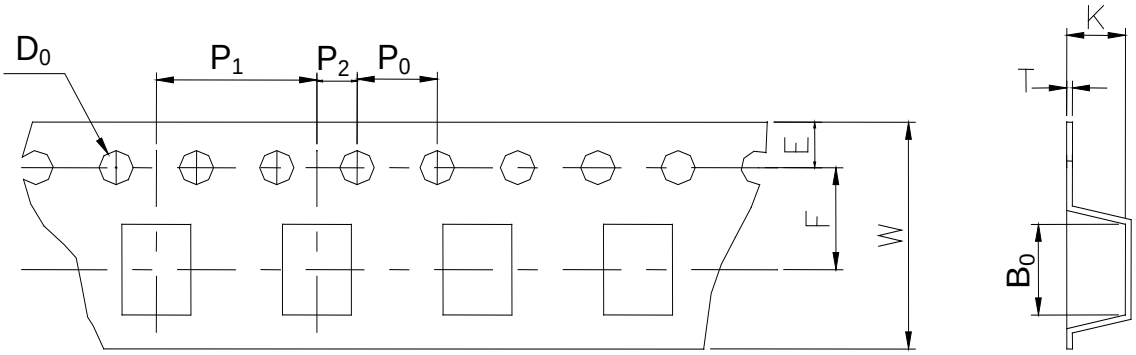

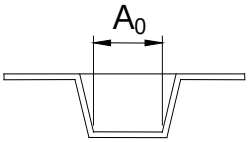

A_0	B_0	W	F	E	P_1	P_2	P_0	D_0	T	K
8.30 ±0.1	8.30 ±0.1	16.0 ±0.3	7.5 ±0.1	1.75 ±0.1	12.0 ±0.1	2.0 ±0.1	4.0 ±0.1	Φ1.5 +0.1 -0	0.50 ±0.1	4.50 ±0.1

12-2 Direction of rolling

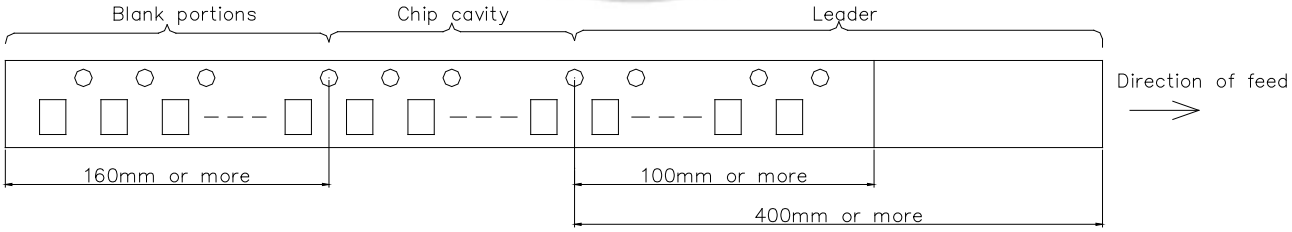

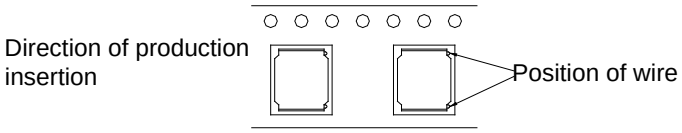

12-3 Reel

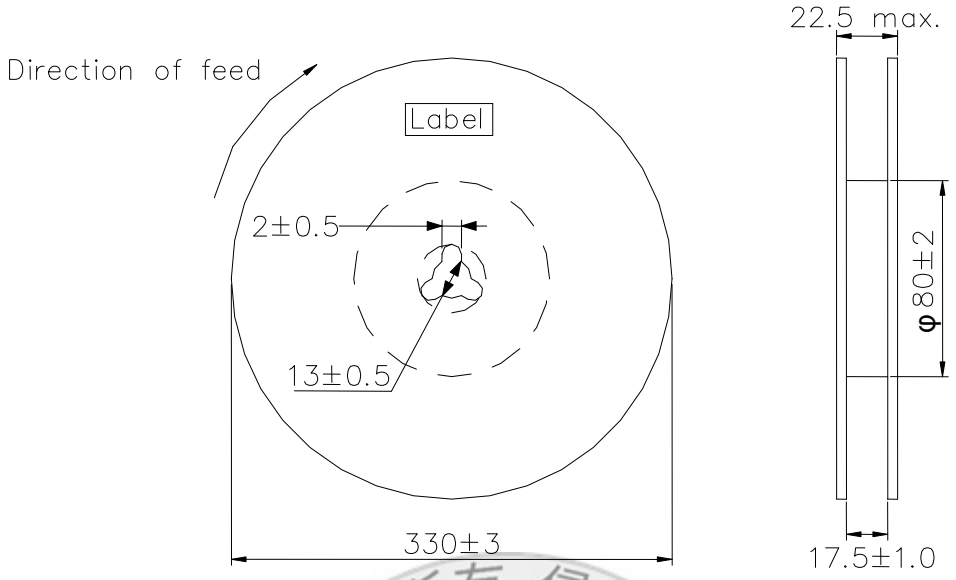

Label position:on the opposite sie of sprocket holes side of reel

12-4 Top tape strength

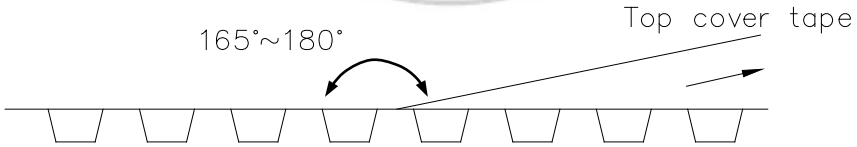

Peel-off strength: 0.1N~1.3N

Peel-off angle:165°~180°

Peel-off speed: 300mm/mm

SPECIFICATION FOR APPROVAL

12-5 Dimensions of packing box (for Tape & Reel package)

UNIT : mm

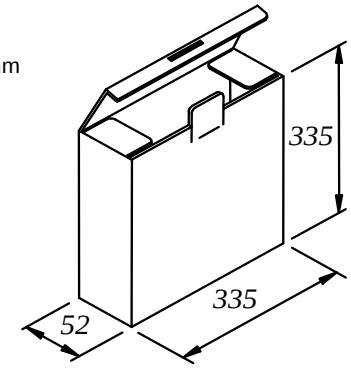

CONSTURCTION:
THE CASE CONTAINS 2-16mm WIDE CARRIER TAPES.
Q'TY : 1,000/ REEL

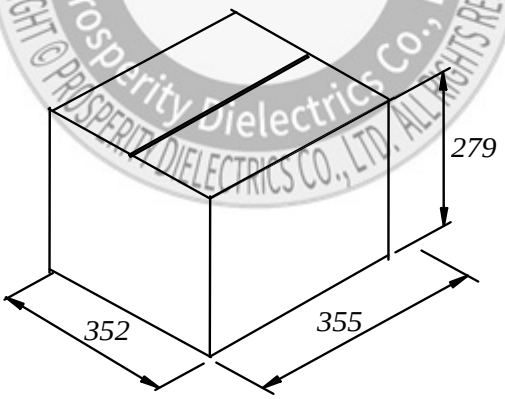

TOTAL Q'TY : 8,000 PCS