Product Approval Sheet

Customer :

Issued no : 2009. 11. 25.
Revision no :

- Product description : Fusible resistor
- Type : NFR25H (0.5W)
- Product code : PNFR 207 ● ● ● ● ●

CUSTOMER			
PILKOR	Checked	Confirmed	Approved
	2008. 8. 25	2008. 8. 25	2008. 8. 25

Headquarters : 381, Woncheon-dong, Yeong tong-gu, Suwon-si, Gyeonggi-do, Korea
PILKOR Electronics Co., Ltd.
TEL. +82-31-217-2500 FAX. +82-31-217-7465

China factory : No 25 Zoutai South Road Rongcheng City, Shandong Province China
Rongcheng PILKOR Electronics Co., Ltd.
TEL. +86-631-755-6001~3 FAX, +86-631-755-6004

* Please returned to us this sheet before the order.

CONTENTS

1. General 2
2. Product code & Packing 3
3. Product Specifications 4-7
4. Reliability Tests 8
5. Materials 8
6. Manufacturing Flow Chart 9

1. General

1-1. Name

This specification is concerned about metal film fusible resistor by PILKOR Electronics LTD. The name of the product is PNFR 25H – 0.5W series

1-2. Ordering Information

The name of a product is divided by kind, shape, characteristic, tolerance and this is Demonstration of 12 NC (Numerical Coding System).

PNFR 207 XX XX X

- X → Multiplier ---------- ⓐ
- XX → Resistance ---------- ⓑ
- XX → Packing Q'ty / Taping type / Tolerance ---------- ⓒ
- 207 → Names of product ---------- ⓓ
- PNFR → Power metal film fixed resistor ---------- ⓔ

12NC Code	ⓐ+ⓑ	ⓒ	ⓓ	ⓔ
PNFR 207 83151	150Ω	2000pcs / R-shape / 5 %	NFR25H / 0.5W	PNFR

1-3. Product indication

The nominal resistance and tolerance are marked on the resistor by four coloured bands according to IEC publication 62 "colour code for fixed resistor" See also general section. to indicate the NFR 0.5W type. there is an additional, fifth, colour-ring, the colour of which is white.

Color coding should be satisfied on the standards and good discernment.

1-4. Electrical data

- The limiting voltage **(DC or RMS) is 350V** This is the maximum voltage that may be applied continuously to the resistor element ; see **IEC** publications **115-1** and **115-4**

- The maximum permissible hot-spot temperature is 155℃

2. Product code & Packing

2-1. Product Code

Type	Taping	Packing unit	Resistance range	Tolerance	Code no
PNFR25H 0.5W	52mm (∅0.55)	Ammo 1000pcs	0.22Ω~15 kΩ	5%	PNFR 207 13•••
		Ammo 5000pcs			PNFR 207 33•••
		Reel 5000pcs			PNFR 207 23•••
	R-Shape (∅0.55)	R-shape 2000pcs			PNFR 207 83•••

2-2. Packing dimension

Ammo	Reel
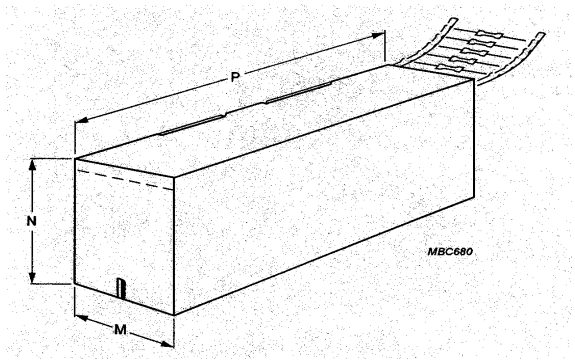	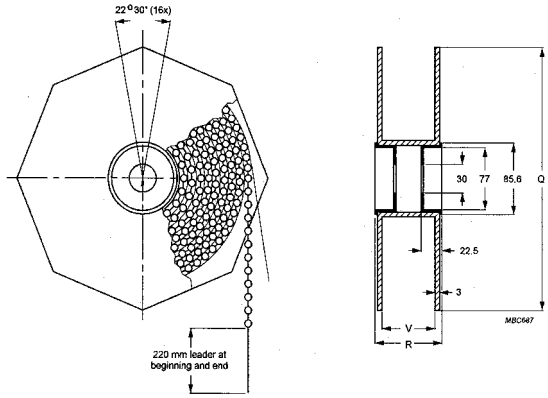

Quantity	M	N	P	Q	V
Ammo 1000pcs	82	28	262		
Ammo 5000pcs	78	98	270		
R-Shape 2000pcs	45	102	330		
Reel 5000pcs				305	75

3. Product Specifications

3-1. Product standard

Type	Description
Resistance range	0.22Ω~15Ω E24series
Resistance tolerance	±5%, ±10%
Rated dissipation at tamb=70℃	0.5W
Temperature coefficient R ≤ 4.7Ω R > 4.7Ω	±250PPM / ℃ ±200PPM / ℃
V max	350V (DC or RMS)
Climatic Category (IEC 68)	55 / 56 / 155
Basic specification	IEC 115-1 and 115-4

3-2. Version with straight leads

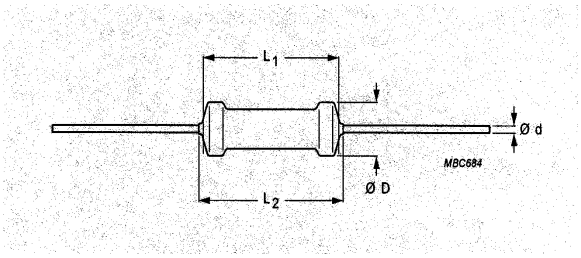

Type	NFR25H 0.5W
D max.	2.5mm
L1 max.	6.5mm
L2 max.	7.0mm
d ±0.05	0.55 mm

3-3. Axial on tape

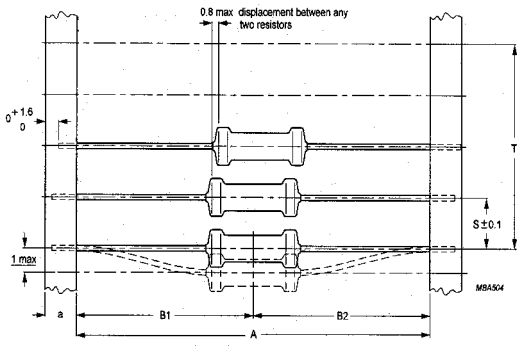

Type	NFR25H 0.5W
A ±1.5	52 mm
S	5 mm
a ±0.5	6 mm
B1-B2 max	52mm ±1.2

3-4. Radial on tape

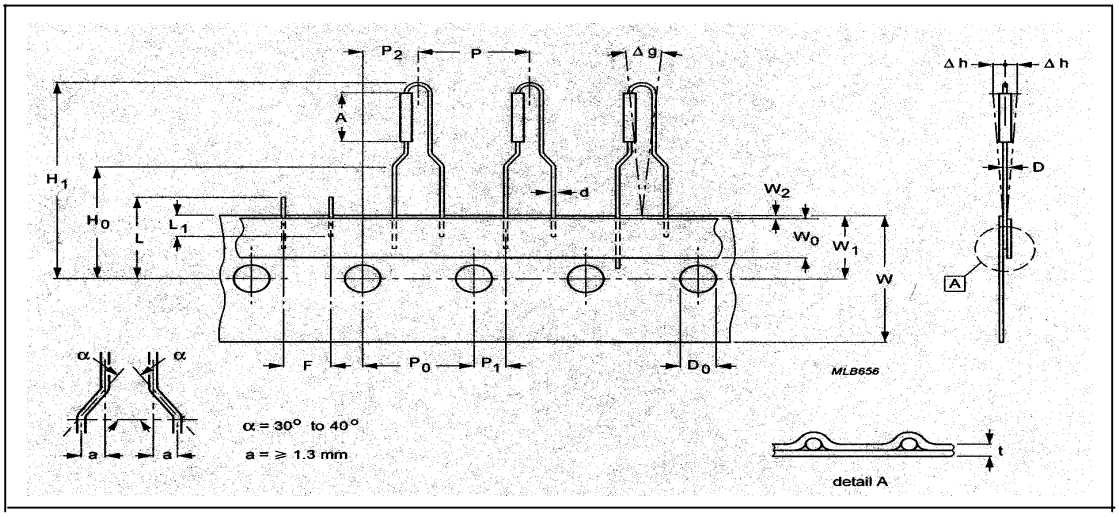

DESCRIPTION	SYMBOL	REQUIREMENT
Body Diameter	D	2.5 max.
Body length	A	6.5 max.
Lead wire diameter	d	0.55 ±0.05mm
Pitch hole pitch	P	12.7±1.0mm
Feed hole pitch	Po	12.7 ± 1.0mm
Cumulative pitch error	T	1.0
Feed hole center to lead at top side of the top	P1	3.85 ± 0.7mm
Fead hole center to body center	P2	6.35 ± 0.7mm
Lead to lead distance	F	5.0 ± 0.8mm
Components alignment	Δh	0 ±2.0mm
Components alignment	Δg	0 ±2.5deg
Tape width	W	18.0 ± 0.5mm
Hole down tape	Wo	Min 5.0mm
Hole position	W1	9.0 ±0.5mm
Hole down tape position	W2	Max 1.5mm
Lead wire clinch height	Ho	16.0 ±0.5mm
Component height	H1	Max 32mm
Feed hole diameter	Do	4.0 ±0.3mm
Total tape thickness	t	0.5 ± 0.2mm
Length of snipped lead	L	Max 11mm
Lead wire (tape portion) shortast lead	L1	Max 3.0mm

3-5. Power on the use temperature

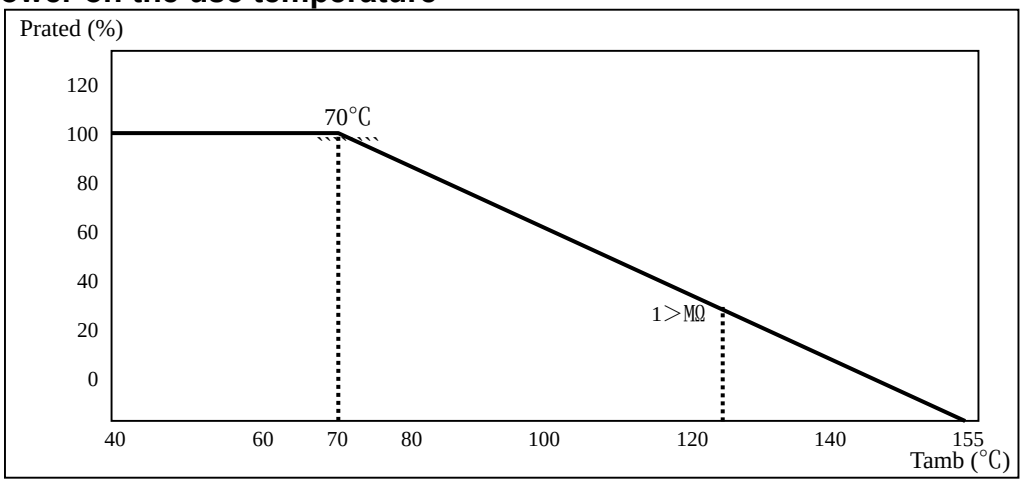

3-6. Time to interruption as a function of overload.

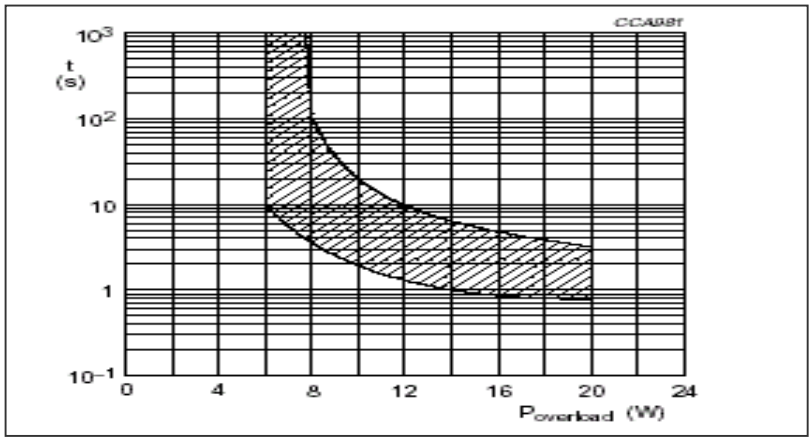

"Interruption" means that the nominal resistance has increased at lest 100 times

Type	Magnification of Pn		Interruption time
	X 25	X 16	Max. 30 sec.
PNFR 25H	R ≤ 1.0 Ω	R ＞1.0 Ω	

3-7. Maximum permissible peak pulse power (P max.)

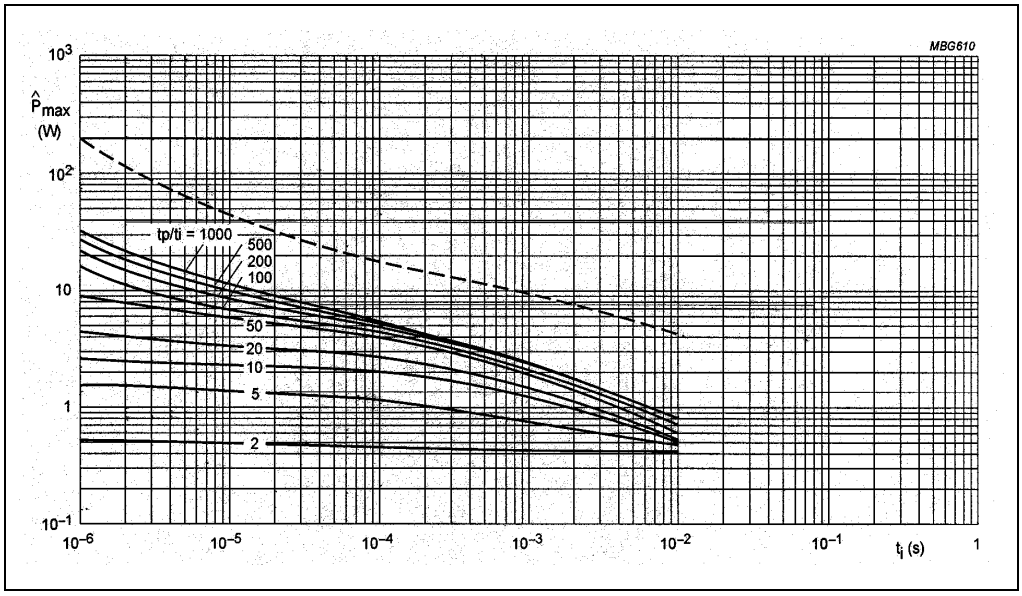

3-8. Maximum permissible peak pulse power (V max.)

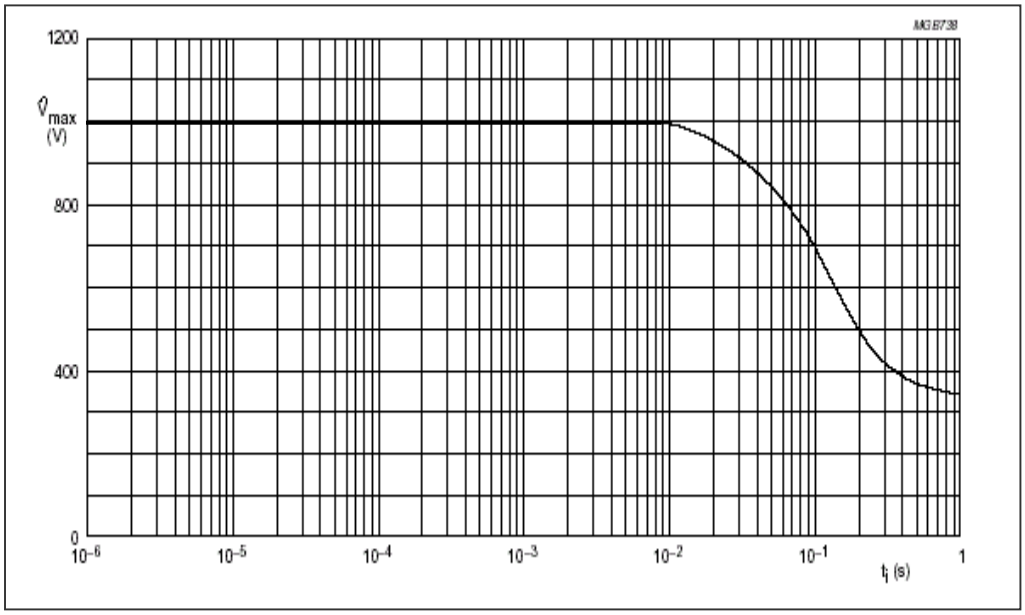

4. Reliability test

Electrical and mechanical characteristics The following characteristics must be inspected regularly for compliance With the requirements according to the instruction

EC 115 -1~4	Test	Procedure	Requirements
4.17	Solder ability	2s; 235℃; flux600	Good tinning ; 95%
4.18	Soldering heat	3s; 350℃; 6mm from body	ΔR/R 0.25% +0.05Ω
4.19	Rapid change of temperature	30min –55℃ and 30min +155℃ 5 cycle	ΔR/R 0.25% +0.05Ω
4.8.4.2	Temperature coefficient	Between –55℃ and +155℃	R≤4.7Ω 250PPM R＞4.7Ω 200PPM
4.24.2	Damp heat steady state	56day; 40℃; 90~95%RH; dissipation 0.01 P_{70}	ΔR/R 1.0% +0.05Ω
4.25.1	Endurance	1000hour; 70℃; 1.5h on 0.5h off Rated voltage	ΔR/R 1.0% +0.05Ω
4.22	Vibration	10~500Hz Displacement 1.5mm or acceleration 10g 3 direction (3×2h)	ΔR max 0.25% +0.05Ω
4.7	Voltage Proof on insulation	600V during 1min V-block method	No break down
4.6.1.1	Insulation resistance	600V(DC) during 1 minute; V-block method	Min10^4 MΩ
4.16.2	Tensile test	Load 2.5Kg 5-10sec	No damage
4.16.3	Bending test	Load 500g 4×90°	No damage
4.13	Accidental Overload	Cheese cloth	No inflammation
	Pulse load		See Figs 3-7 to 3-8

5. Raw materials

Materials name	Component	Supplier
Ceramic	Alumina 85%	Ceram tec / Meiwa
Film materials	Ni, Cr, Si, Al (Metal film)	Kistar
Cap	Fe body Sn coating	Song-Ho Accuracy
Lead Wire	Cu + Sn 100% coating	SK Metal ST Telecom
Lacquer	Grey (Silicone)	Pelnox / Namics

6. Resistor Flow Chart

Process	Material	Flow Chart	Check Point	Owner
Firing		Rods	- Lot No.	P.O
	- Ceramic dish		- Temp. (600℃) - Time (3hrs)	
Storage	- Ceramic dish		- Temperature (120℃)	P.O
Sputtering	- Ni, Cr, Si, Al	Target	- Air / Tamp - Viscosity - Value / Tolerance	P.O
Storage	- Plastic Box		- Temperature	P.O
Capping	- Steel Cap	Cap	- Length - Pull-off	P.O
Helixing	- Stone - Laser Beam	Stone	- Groove / Value - T. H. I	P.I
Welding	- Lead Wire (Cu+Su)	Wire	- Welding Condition - W. I. U	P.I
Lacquering	- Outer lacquer	Lacquer	- Temperature - Viscosity - Visual insp.	P.I
Color coding	- Color Paint	Color	- Visual insp.	P.I
Taping	- Adhesive tape - Kraft tape - Inner box	Tape & Box	- Visual insp.	P.I
Final Inspection	- Label			Q.I